AGENDA
TOWN OF PITTSFORD
PLANNING BOARD
OCTOBER 27, 2025

This agenda is subject to change.

Please take notice that the Town of Pittsford Planning Board will hold the following meeting on Monday, October 27, 2025, in the Lower-Level Meeting Room of Pittsford Town Hall, 11 S. Main Street, beginning at 6:30PM local time.

The Board will hold an agenda review session in the Second-Floor Meeting Room at 6:00PM.

CONTINUED HEARING

Sundown Designs NY LLC, 834 Linden Avenue (Universal Imports of Rochester)
Preliminary/Final Site Plan

NEW APPLICATION

BME Associates, Coventry Ridge Section 3
Final Site Plan

OTHER BUSINESS

Approval of Minutes

The next scheduled meeting is for Monday, November 10, 2025.

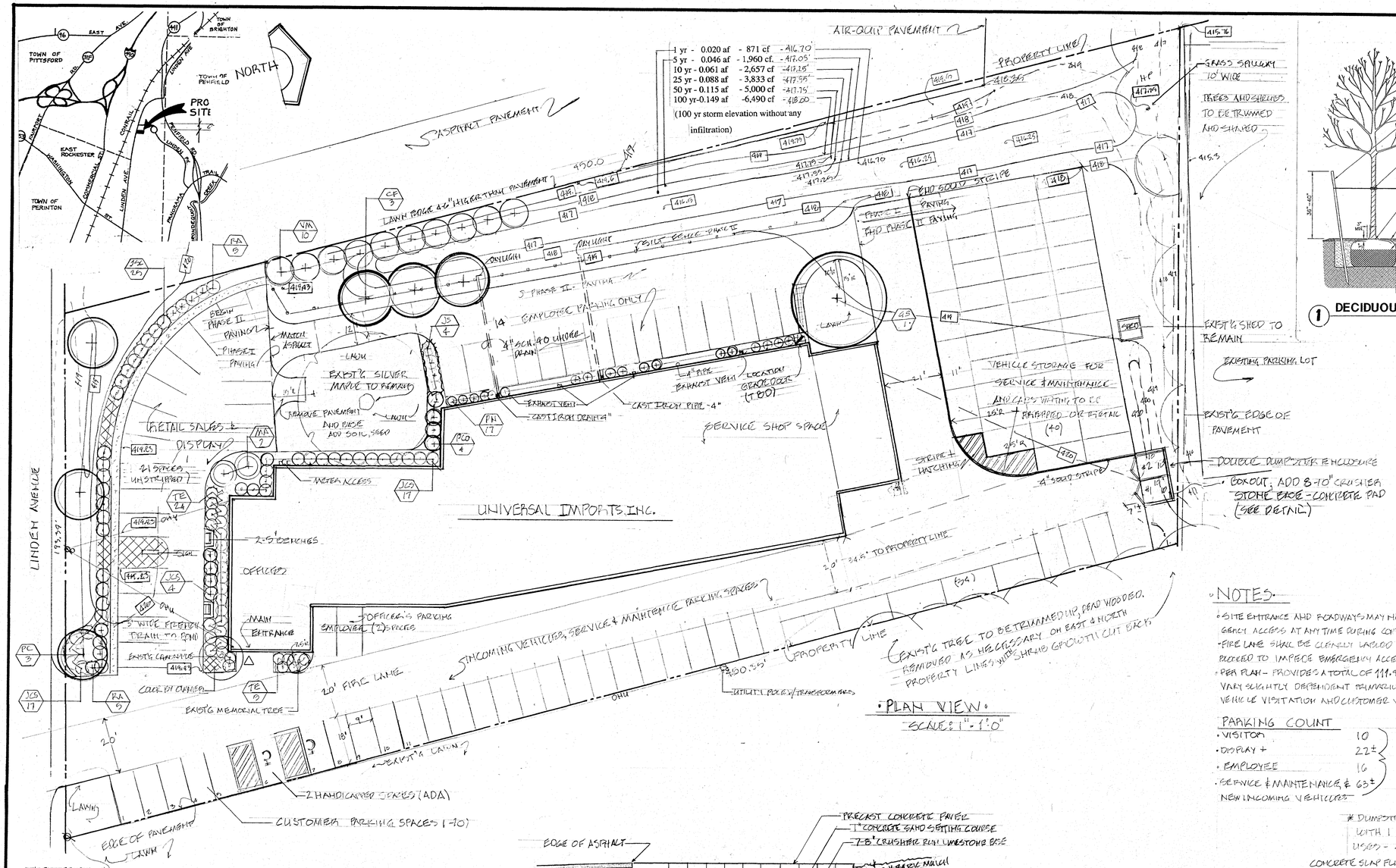

• PLAN VIEW •
SCALE: 1" = 1'-0"

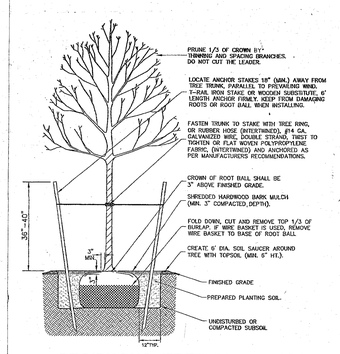

1 DECIDUOUS TREE PLANTINGS

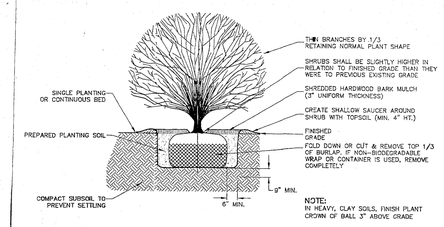

2 SHRUB PLANTINGS

PITTSFORD PLANNING BOARD

APPROVED BY:
COMMISSIONER OF PUBLIC WORKS
DATE:
APPROVED BY:
TOWN ENGINEER
DATE:

APPROVED
DATE
TOWN OF PITTSFORD PLANNING BOARD

• NOTES •

- SITE ENTRANCE AND ROADWAYS MAY NOT BE BLOCKED TO WHERE EMERGENCY ACCESS AT ANY TIME DURING CONSTRUCTION
- FIRE LANE SHALL BE CLEARLY MARKED AND IDENTIFIED AND MAY NOT BE BLOCKED TO IMPEDE EMERGENCY ACCESS AT ANY TIME
- PER PLAN - PROVIDES A TOTAL OF 111.9'x18' SPACES, DAILY COUNTS MAY VARY SLIGHTLY DEPENDENT PRIMARILY ON MENCAR ARRIVALS, SERVICE VEHICLE VISITATION AND CUSTOMER VISITS.

PARKING COUNT

• VISITOR	10	111 TOTAL
• DISPLAY +	22±	
• EMPLOYEE	16	
• SERVICE & MAINTENANCE, & NEW INCOMING VEHICLES	63±	

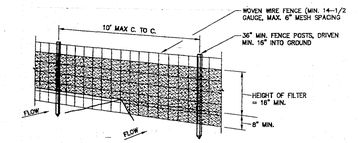

PERSPECTIVE VIEW

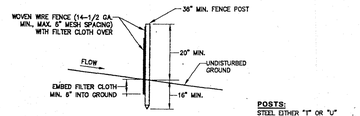

SECTION

CONSTRUCTION NOTES FOR FABRICATED SILT FENCE

1. WOVEN WIRE FENCE TO BE FASTENED SECURELY TO FENCE POSTS WITH WIRE TIES OR STAPLES.
2. FILTER CLOTH TO BE FASTENED SECURELY TO WOVEN WIRE FENCE WITH TIES SPACED EVERY 24" AT TOP AND MID SECTION.
3. WHEN TWO SECTIONS OF FILTER CLOTH ADJOIN EACH OTHER THEY SHALL BE OVERLAPPED BY SIX INCHES AND FOLDED.
4. MAINTENANCE SHALL BE PERFORMED AS NEEDED AND MATERIAL REMOVED WHEN "BULGES" DEVELOP IN THE SILT FENCE.

POSTS: STEEL EITHER "T" OR "L" TYPE OR 2" HARDWOOD.

FENCE: WOVEN WIRE, 14-1/2 GA., 6" MAX. MESH OPENINGS.

FILTER CLOTH: FILTER X, MIRAFI 100X, STABILINKA T140N OR APPROVED EQUAL.

PREFABRICATED UNIT: GEOFAB, ENVIROFENCE, OR APPROVED EQUAL.

EROSION FENCE

PLANT LIST

KEY	BOTANICAL NAME	COMMON NAME	QUAN.	SIZE	ROOT	REMARKS
PHASE I PLANTINGS						
JCS	JUNIPERUS CHIN. 'SEA GREEN'	SEA GREEN JUNIPER	17	24" SPR.	B&B	OC @ 5 CONT
JC	JUNIPERUS SAB. 'CALGARY CARPET'	CALGARY CARPET JUNIPER	29	18" SPR.	#3 CONT	
MA	MALUS 'ADIRONDACK'	ADIRONDACK CRABAPPLE	2	2" CAL	B&B	MATCHED
PC	PYRUS CAL. 'CLEVELAND SELECT'	CLEVELAND SELECT PEAR	3	2½" CAL.	B&B	
RA	RHUS AROM. 'GRO-LOW	GRO-LOW SUMAC	10	18" SPR.	#2 CONT	FULL, HEAVY
TE	TAXUS MED. 'EVERLOW'	EVERLOW YEW	29	18-24" SPR.	B&B	
VM	VIBURNUM LANT. 'MOHICAN'	MOHICAN VIBURNUM	10	4' HT.	B&B	8.5' O.C
PHASE II PLANTINGS						
CF	CARPINUS BET. 'FRANS FONTAINE	FRANS FONTAINE HORNBEAM	3	2" CAL.	#15 CONT	
GS	GLEDITSIA T.I. 'SKYLINE'	SKYLINE HONEYLOCUST	1	2½" CAL.	B&B	
JS	JUNIPERUS CHIN. 'SPARTAN'	SPARTAN JUNIPER	4	6' HT.	B&B	
PN	PANICUM VIRG. 'NORTHWIND'	NORTHWIND SWITCH GRASS	18	GUMP	#2 CONT	
PCO	PHYSOCARPUS O. 'CENTER GLOW'	CENTER GLOW NINEBARK	4	3-4' HT.	#3 CONT	

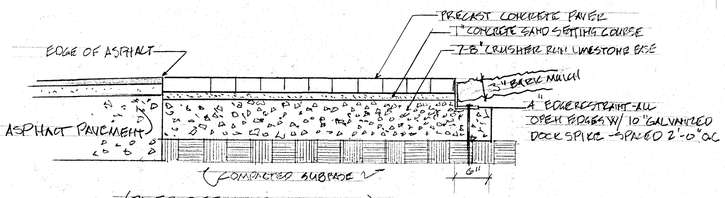

(PAVER DETAIL BENCH AREAS-2)
SCALE: 1" = 1'-0"

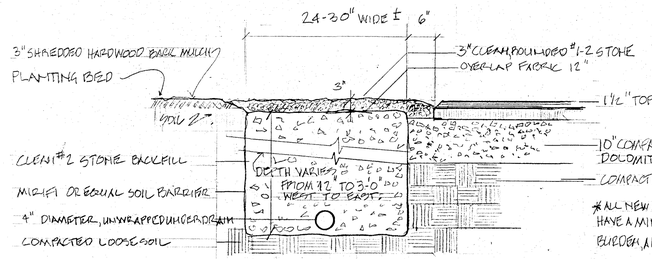

• FRENCH DRAIN / NEW ASPHALT PAVEMENT •
SCALE: 3/4" = 1'-0"

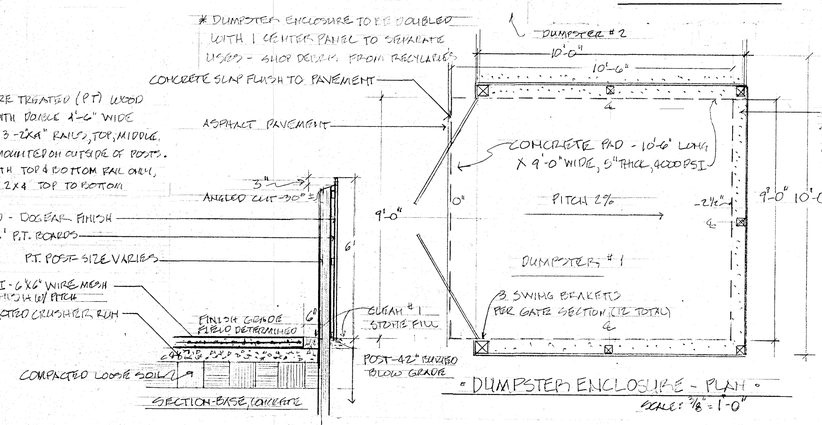

• DUMPSTER ENCLOSURE - PLAN •
SCALE: 3/8" = 1'-0"

REGISTERED LANDSCAPE ARCHITECT HEINRICH WILHELM FISCHER 009533 STATE OF NEW YORK

HEINRICH W. FISCHER, R.L.A.
722 AYRAULT ROAD
FAIRPORT, N.Y. 14450

LANDSCAPE DEVELOPMENT PLAN
UNIVERSAL IMPORTS OF ROCHESTER, INC
834 LINDEN AVENUE ROCHESTER, N.Y. 14620

PROJ. NO.: 17.01-25	DRAWN BY: HWF	DRAW'G. 1
SCALE: AS SHOWN	APPROVED BY:	
DATE: 4-21-25	REVISIONS: 7-26-25, 10-8-25	

October 27, 2025

TOWN OF PITTSFORD
PLANNING BOARD
SEQRA RESOLUTION
834 Linden Ave (Universal Imports)
Preliminary/Final Site Plan
Tax Parcel #138.15-1-7

WHEREAS, Sundown Designs NY LLC, as agent for Universal Imports of Rochester Inc., is requesting Preliminary/Final Site Plan approval for expansion of a parking lot and associated site work at 834 Linden Avenue, with application materials received July 7, 2025, and amended October 9, 2025; and

WHEREAS this is an Unlisted Action pursuant to SEQRA and as the only involved agency the Planning Board is conducting a single agency review; and

WHEREAS a Part I Short EAF was submitted by the applicant and the Planning Board has completed a Part II Short EAF, attached hereto; and

NOW, THEREFORE, upon consideration by the Planning Board of all written and oral submissions and testimony by the applicant, appropriate agencies, and the public, the Planning Board having given this matter due deliberation and consideration; it is

RESOLVED, that the Planning Board finds that the proposed action will not have any significant adverse impact on the environment, and accordingly, hereby grants a negative declaration pursuant to the State Environmental Quality Review Act based upon the following Findings of Fact:

FINDINGS OF FACT

1. This application proposes the construction of a 14-space parking lot on the west side of the building and associate site work at 834 Linden Avenue (Universal Imports).

2. The Planning Board has considered possible environmental impacts associated with the application and completed a Short Part II EAF which did not identify significant impacts, attached hereto.

3. The total site disturbance is 0.2 +/- acres for the proposed site work. A SWPPP was not required.

4. The addition of 6,558 +/- square feet of asphalt will not exceed the maximum impervious coverage permitted.

CONCLUSION

The Planning Board finds that the proposed action will not have any significant adverse impact on the environment, and accordingly, hereby grants a negative declaration pursuant to the State Environmental Quality Review Act.

The within Resolution was motioned by Planning Board Member , seconded by Planning Board Member , and voted upon by members of the Planning Board as follows:

David Jefferson
Paul Alguire
Kevin Morabito
Paula Liebschutz
Hali Buckley
John Limbeck
John Halldow

DRAFT

Adopted by the Planning Board on October 27, 2025.

_____
April Zurowski
Planning Assistant

DRAFT

617.20
Appendix B
Short Environmental Assessment Form

Instructions for Completing

Part 1 - Project Information. The applicant or project sponsor is responsible for the completion of Part 1. Responses become part of the application for approval or funding, are subject to public review, and may be subject to further verification. Complete Part 1 based on information currently available. If additional research or investigation would be needed to fully respond to any item, please answer as thoroughly as possible based on current information.

Complete all items in Part 1. You may also provide any additional information which you believe will be needed by or useful to the lead agency; attach additional pages as necessary to supplement any item.

Part 1 - Project and Sponsor Information

MARK FUERBACHER, PRESIDENT OF UNIVERSAL IMPORTS, OF ROCHESTER, NY

Name of Action or Project:

INSTALLATION OF 4940 SQ FT ASPHALT PAVEMENT FOR ADDITIONAL PARKING

Project Location (describe, and attach a location map):

834 LINDEN AVENUE ROCHESTER, NY

Brief Description of Proposed Action:

STRIP EXISTING GRASS, REMOVE SOIL, INSTALL 4940 S.F OF DOLOMITE STONE 4-10" BASE, 2½" DENSE BINDER AND PLANT MATERIAL

Name of Applicant or Sponsor:

Mark Fuerbacher

[redacted]

Address:

834 Linden Ave

City/PO:	State:	Zip Code:
Rochester	NY	14625

	NO	YES
1. Does the proposed action only involve the legislative adoption of a plan, local law, ordinance, administrative rule, or regulation? If Yes, attach a narrative description of the intent of the proposed action and the environmental resources that may be affected in the municipality and proceed to Part 2. If no, continue to question 2.	☒	☐
2. Does the proposed action require a permit, approval or funding from any other governmental Agency? If Yes, list agency(s) name and permit or approval:	☒	☐

3.a. Total acreage of the site of the proposed action? 1.84 acres
b. Total acreage to be physically disturbed? .113 acres
c. Total acreage (project site and any contiguous properties) owned or controlled by the applicant or project sponsor? 1.84 acres

4. Check all land uses that occur on, adjoining and near the proposed action.
☐ Urban ☐ Rural (non-agriculture) ☐ Industrial ☒ Commercial ☐ Residential (suburban)
☐ Forest ☐ Agriculture ☐ Aquatic ☐ Other (specify): _____
☐ Parkland

	NO	YES	N/A
5. Is the proposed action, a. A permitted use under the zoning regulations?	☐	☒	☐
b. Consistent with the adopted comprehensive plan?	☐	☒	☐

	NO	YES
6. Is the proposed action consistent with the predominant character of the existing built or natural landscape?	☐	☒

	NO	YES
7. Is the site of the proposed action located in, or does it adjoin, a state listed Critical Environmental Area? If Yes, identify: _____	☒	☐

	NO	YES
8. a. Will the proposed action result in a substantial increase in traffic above present levels?	☒	☐
b. Are public transportation service(s) available at or near the site of the proposed action?	☒	☐
c. Are any pedestrian accommodations or bicycle routes available on or near site of the proposed action?	☒	☐

	NO	YES
9. Does the proposed action meet or exceed the state energy code requirements? If the proposed action will exceed requirements, describe design features and technologies: _____	☐	☒

	NO	YES
10. Will the proposed action connect to an existing public/private water supply? If No, describe method for providing potable water: _____	☒	☐

	NO	YES
11. Will the proposed action connect to existing wastewater utilities? If No, describe method for providing wastewater treatment: DETENTION POND	☒	☐

	NO	YES
12. a. Does the site contain a structure that is listed on either the State or National Register of Historic Places?	☒	☐
b. Is the proposed action located in an archeological sensitive area?	☒	☐

	NO	YES
13. a. Does any portion of the site of the proposed action, or lands adjoining the proposed action, contain wetlands or other waterbodies regulated by a federal, state or local agency?	☒	☐
b. Would the proposed action physically alter, or encroach into, any existing wetland or waterbody? If Yes, identify the wetland or waterbody and extent of alterations in square feet or acres: _____	☒	☐

14. Identify the typical habitat types that occur on, or are likely to be found on the project site. Check all that apply:
☐ Shoreline ☐ Forest ☐ Agricultural/grasslands ☐ Early mid-successional
☐ Wetland ☒ Urban ☐ Suburban

	NO	YES
15. Does the site of the proposed action contain any species of animal, or associated habitats, listed by the State or Federal government as threatened or endangered?	☐	☐

	NO	YES
16. Is the project site located in the 100 year flood plain?	☐	☐

	NO	YES
17. Will the proposed action create storm water discharge, either from point or non-point sources? If Yes, a. Will storm water discharges flow to adjacent properties? ☒ NO ☐ YES	☐	☐
b. Will storm water discharges be directed to established conveyance systems (runoff and storm drains)? If Yes, briefly describe: ☐ NO ☒ YES BUILT AND FUNCTIONING DETENTION AREA		

	NO	YES
18. Does the proposed action include construction or other activities that result in the impoundment of water or other liquids (e.g. retention pond, waste lagoon, dam)? If Yes, explain purpose and size:	☒	☐
19. Has the site of the proposed action or an adjoining property been the location of an active or closed solid waste management facility? If Yes, describe:	☒	☐
20. Has the site of the proposed action or an adjoining property been the subject of remediation (ongoing or completed) for hazardous waste? If Yes, describe:	☒	☐

I AFFIRM THAT THE INFORMATION PROVIDED ABOVE IS TRUE AND ACCURATE TO THE BEST OF MY KNOWLEDGE

Applicant/sponsor name: HEINRICH W. FISCHER Date: 7-3-25

Signature: [illegible]

Short Environmental Assessment Form
Part 2 - Impact Assessment

Part 2 is to be completed by the Lead Agency.

Answer all of the following questions in Part 2 using the information contained in Part 1 and other materials submitted by the project sponsor or otherwise available to the reviewer. When answering the questions the reviewer should be guided by the concept "Have my responses been reasonable considering the scale and context of the proposed action?"

	No, or small impact may occur	Moderate to large impact may occur
1. Will the proposed action create a material conflict with an adopted land use plan or zoning regulations?	☑	☐
2. Will the proposed action result in a change in the use or intensity of use of land?	☑	☐
3. Will the proposed action impair the character or quality of the existing community?	☑	☐
4. Will the proposed action have an impact on the environmental characteristics that caused the establishment of a Critical Environmental Area (CEA)?	☑	☐
5. Will the proposed action result in an adverse change in the existing level of traffic or affect existing infrastructure for mass transit, biking or walkway?	☑	☐
6. Will the proposed action cause an increase in the use of energy and it fails to incorporate reasonably available energy conservation or renewable energy opportunities?	☑	☐

7. Will the proposed action impact existing: a. public / private water supplies?	☑	☐
b. public / private wastewater treatment utilities?	☑	☐
8. Will the proposed action impair the character or quality of important historic, archaeological, architectural or aesthetic resources?	☑	☐
9. Will the proposed action result in an adverse change to natural resources (e.g., wetlands, waterbodies, groundwater, air quality, flora and fauna)?	☑	☐
10. Will the proposed action result in an increase in the potential for erosion, flooding or drainage problems?	☑	☐
11. Will the proposed action create a hazard to environmental resources or human health?	☑	☐

Short Environmental Assessment Form
Part 3 Determination of Significance

For every question in Part 2 that was answered "moderate to large impact may occur", or if there is a need to explain why a particular element of the proposed action may or will not result in a significant adverse environmental impact, please complete Part 3. Part 3 should, in sufficient detail, identify the impact, including any measures or design elements that have been included by the project sponsor to avoid or reduce impacts. Part 3 should also explain how the lead agency determined that the impact may or will not be significant. Each potential impact should be assessed considering its setting, probability of occurring, duration, irreversibility, geographic scope and magnitude. Also consider the potential for short-term, long-term and cumulative impacts.

☐ Check this box if you have determined, based on the information and analysis above, and any supporting documentation, that the proposed action may result in one or more potentially large or significant adverse impacts and an environmental impact statement is required.

☐ Check this box if you have determined, based on the information and analysis above, and any supporting documentation, that the proposed action will not result in any significant adverse environmental impacts.

Name of Lead Agency	Date
Print or Type Name of Responsible Officer in Lead Agency	Title of Responsible Officer
Signature of Responsible Officer in Lead Agency	Signature of Preparer (if different from Responsible Officer)

October 27, 2025

TOWN OF PITTSFORD
PLANNING BOARD
RESOLUTION
834 Linden Ave (Universal Imports)
Preliminary/Final Site Plan
Tax Parcel #138.15-1-7

WHEREAS, Sundown Designs NY LLC, as agent for Universal Imports of Rochester Inc., is requesting Preliminary/Final Site Plan approval for expansion of a parking lot and associated site work at 834 Linden Avenue, with application materials received July 7, 2025, and amended October 9, 2025; and

WHEREAS this is an Unlisted Action pursuant to SEQRA and as the only involved agency the Planning Board is conducting a single agency review; and

WHEREAS, a public hearing was duly advertised and held on August 25, 2025, and continued through October 27, 2025, at which time it was closed, and public comment was incorporated into the public record; and

NOW, THEREFORE, upon consideration by the Planning Board of all written and oral submissions and testimony by the applicant, appropriate agencies, and the public, the Planning Board having given this matter due deliberation and consideration; it is

RESOLVED, that the Planning Board of the Town of Pittsford grants Preliminary/Final Site Plan approval based upon the following Findings of Fact and subject to compliance with the following Conditions of Approval:

FINDINGS OF FACT

1. This application proposes the construction of a 14-space parking lot on the west side of the building and associated site work at 834 Linden Avenue (Universal Imports).

2. There are no proposed changes to the exterior lighting at the site. Any future changes to exterior lighting will require Planning Board approval and will be subject to Town Code Article XV.

3. The total site disturbance is 0.2 +/- acres for the proposed site work. A SWPPP was not required.

4. The Planning Board finds that the site improvements maintain compliance with Town Code Article XVA to the greatest extent practicable; offers and innovative development/design solution for the site in question; will not result in a detrimental effect on the public health, safety, or general welfare; and is compatible with the stated vision and goals of the Town's Comprehensive Plan and other relevant plans and studies.

CONDITIONS OF APPROVAL

1. Subject to compliance with or resolution to the DRC comments dated August 23, 2025, and the applicant's written responses received September 8, 2025, unless otherwise specified herein.

2. The Universal Imports operation must comply with Town Code §185-104 which regulates vehicle sales, service, and repair shops. The proposed plan meets this code section.

3. The site must comply with Town Code §185-53.1 which sets performance standards for landscape buffering and HVAC and dumpster enclosures. The proposed plan meets this code section.

4. All parking areas shall be hard-surfaced, such as asphalt or concrete, and have a dust-free surface, capable of being kept free of snow and debris, maintained in a smooth and well-graded condition. Vehicles should not be parked on the grass.

DRAFT

5. Minor adjustments to the approved landscaping plan are subject to Department of Public Works approval. A cost estimate has been provided and it seems that the site improvements meet Town Code §185-194 C. which requires all projects shall have landscaping equal to a minimum expenditure of 1% of the total project cost. A more detailed cost estimate will be required prior to Planning Board signature.

6. Any revisions to the existing stormwater pond are subject to review and approval by the Town Engineer.

The within Resolution was motioned by Planning Board Member , seconded by Planning Board Member , and voted upon by members of the Planning Board as follows:

David Jefferson
Paul Alguire
Kevin Morabito
Paula Liebschutz
Hali Buckley
John Limbeck
John Halldow

Adopted by the Planning Board on October 27, 2025.

_____
April Zurowski
Planning Assistant

DRAFT

BME | ASSOCIATES

ENGINEERS • SURVEYORS • LANDSCAPE ARCHITECTS

September 19, 2025

Planning Board
Town of Pittsford
11 S. Main Street
Pittsford, NY 14534

Re: Coventry Ridge Section 3 **9502F**
Final Subdivision Application

Dear Board Members:

On behalf of Clover Street Development Corporation, we submit the enclosed application for Coventry Ridge Subdivision Section 3 for final subdivision review and approval. We request to appear at your October 27, 2025 public hearing to present this application. For your consideration and review, we have included 14 copies (unless otherwise noted) of the following application materials:

- Letter of Intent
- (4) Full Size and (10) 11x17 sets - Final Subdivision Plans (BME Dwg #s 9502F-01 to 9502F-12)
- Planning Board Application Form
- Authorization to Make Application Form
- Section 809 Disclosure Form
- BME Letter Addressing Preliminary Approval Resolution Conditions, dated 9/19/25
- SWPPP Addendum for Coventry Ridge Sections 3 & 4, dated 9/19/25 (2 copies)
- Final Subdivision Application Fee of $820 ($500+$20/lot @ 16 lots)

The Final Subdivision application maintains conformance with the Preliminary Subdivision Application Approval granted by the Town of Pittsford Planning Board on August 26, 2024, which granted preliminary approval of the proposed 16-lot subdivision on a dedicated public road. The final subdivision and development plans have been revised to address Planning Board preliminary approval conditions, comments received from the Town's DRC report, and design revisions as coordinated with the Town Planning and Development Department staff. The project received a SEQRA negative declaration from the Planning Board on February 8, 1999 and the scope of the project is consistent with the SEQRA review, thus no further SEQRA procedures are required.

We look forward to presenting the application at your October 27, 2025 Planning Board meeting. Please review the enclosed materials and contact our office with any questions.

Sincerely,
BME Associates

Abigail N. D'Angelo

Abigail N. D'Angelo, E.I.T.

/AND

Encl.

c: Clover Street Development Corp. – (6) Enclosures
MRB Group, Dave Willard PE – (6) Enclosures

P:\9502F\Drawings\Final\9502F Cover Sheet.dwg

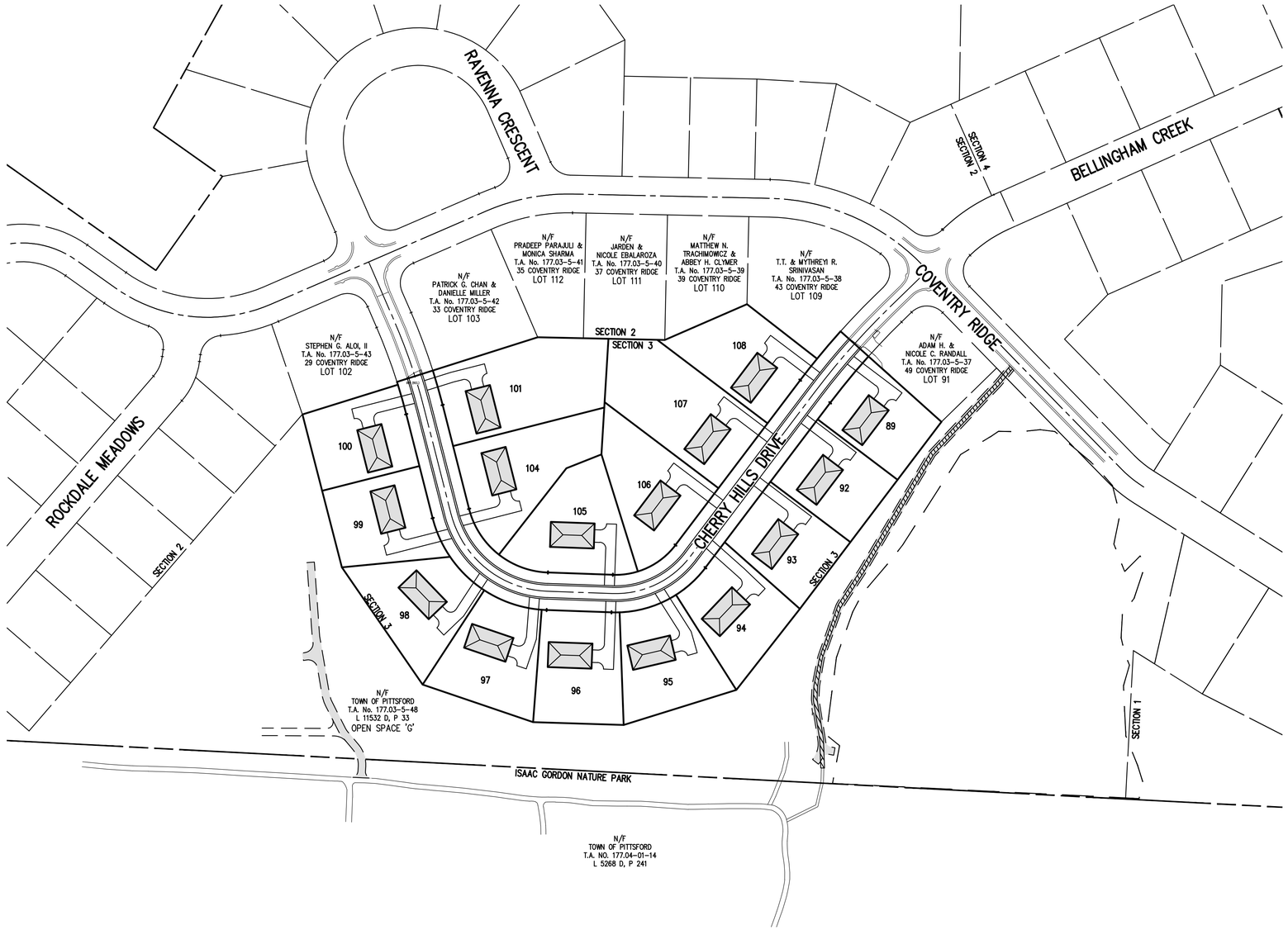

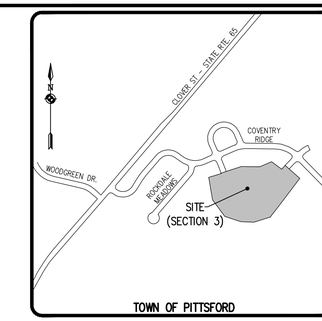

LOCATION MAP

COVENTRY RIDGE SUBDIVISION

SECTION 3

CHERRY HILLS DRIVE

TOWN OF PITTSFORD, MONROE COUNTY, NEW YORK STATE

PREPARED FOR:

CLOVER STREET DEVELOPMENT CORPORATION

30 GROVE STREET

PITTSFORD, NY 14534

FINAL PLANS

COVENTRY RIDGE SUBDIVISION

SECTION 3

DWG NO.	TITLE
9502F-01	COVER SHEET
9502F-02	SUBDIVISION PLAT
9502F-03	UTILITY PLAN
9502F-04	GRADING PLAN
9502F-05	CONSTRUCTION EROSION CONTROL PLAN
9502F-06	LATERAL PLAN
9502F-07	PROFILE SHEET
9502F-08	NOTE SHEET
9502F-09	DETAIL SHEET (SHEET 1 OF 3)
9502F-10	DETAIL SHEET (SHEET 2 OF 3)
9502F-11	DETAIL SHEET (SHEET 3 OF 3)
9502F-12	SECTION 1B TRAIL PLAN

SCALE: 1" = 100'

DRAWING NUMBER: 9502F-01
DATE ISSUED: APRIL 3, 2024
LAST REVISED: SEPTEMBER 19, 2025

BME ASSOCIATES
ENGINEERS • SURVEYORS • LANDSCAPE ARCHITECTS
10 LIFT BRIDGE LANE EAST
FAIRPORT, NEW YORK 14450
WWW.BMEPC.COM
585-377-7360

P:\9502F\Drawings\Final\9502F Layout Base.dwg

REFERENCES:

1. A PLAN ENTITLED "COVENTRY RIDGE, SECTION 1, PHASE A, FINAL, SUBDIVISION PLAT, PREPARED BY BME ASSOCIATES, AS FILED AT THE MONROE COUNTY CLERK'S OFFICE IN LIBER 341 OF MAPS, PAGE 94.
2. A PLAN ENTITLED "COVENTRY RIDGE, SECTION 1, PHASE B," PREPARED BY BME ASSOCIATES, AS FILED AT THE MONROE COUNTY CLERKS OFFICE IN LIBER 363, PAGE 1.
3. A PLAN ENTITLED "COVENTRY RIDGE, SECTION 2, FINAL, SUBDIVISION PLAT," PREPARED BY BME ASSOCIATES, AS FILED AT THE MONROE COUNTY CLERKS OFFICE IN LIBER 349 OF MAPS, PAGE 76 & 77.
4. AN ABSTRACT OF TITLE WAS NOT PROVIDED FOR THE COMPLETION OF THIS SURVEY.

SURVEY NOTES:

1. THE HORIZONTAL DATUM SHOWN HEREON IS REFERENCED TO THE NEW YORK STATE PLANE COORDINATE SYSTEM, TRANSVERSE MERCATOR PROJECTION, NAD 27, WESTERN ZONE THROUGH TIES TO THE FOLLOWING CONTROL MONUMENTS USING PROCEDURES NECESSARY TO ACHIEVE AN INDICATED ACCURACY OF NOT LESS THAN 1 PART IN 10,000.

STATION 4-2-24 (NYSDOT) 1969 N= 1,116,092.87' E= 774,519.52'

STATION 4-2-25 (NYSDOT) 1969 N= 1,117,526.75' E= 775,508.75'

BEARINGS ARE GRID
DISTANCES ARE GROUND
COMBINED FACTOR=0.9999915

GRAPHIC SCALE

50 0 25 50 100

(IN FEET)
1 inch = 50 ft.

LEGEND

- BOUNDARY LINE
- PROPOSED LOT LINE
- CENTERLINE
- SETBACK LINE
- PROPERTY MARKER FOUND
- EXISTING EASEMENT LINE
- PROPOSED EASEMENT LINE
- R.O.W. SURVEY MONUMENT

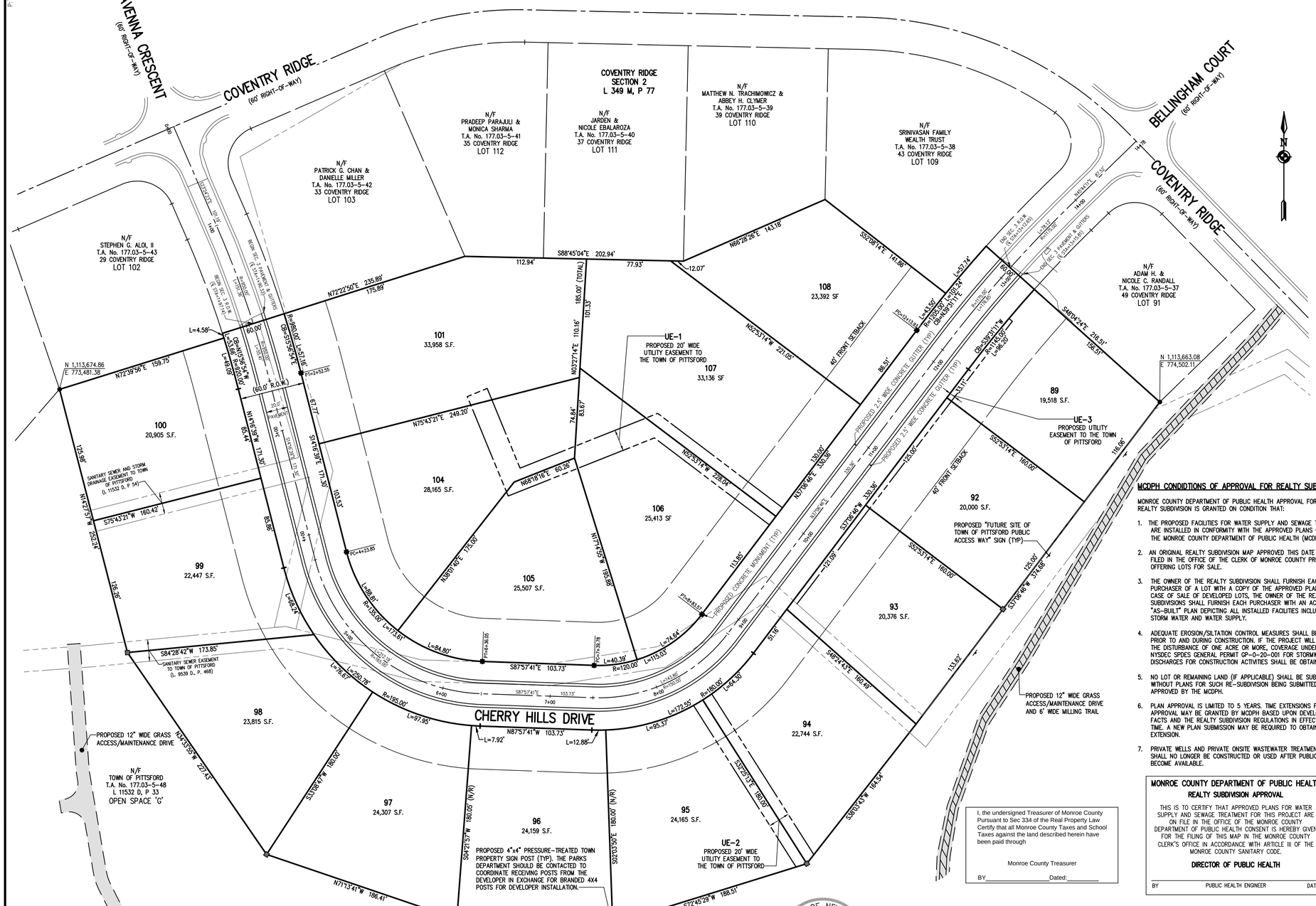

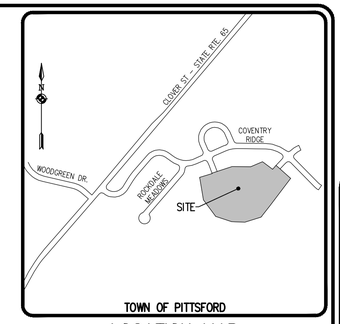

LOCATION MAP

SUBDIVISION NOTES:

1. EXISTING ZONING IS IZ – INCENTIVE ZONING AND RN– RESIDENTIAL NEIGHBORHOOD.
2. TOTAL PROJECT AREA IS 139.765 ACRES CONTAINING 112 LOTS.
   SECTION 3 AREA IS 10.524 ACRES CONTAINING 16 LOTS.
3. PROPOSED USE: SINGLE FAMILY RESIDENTIAL LOTS
4. THIS SUBDIVISION IS APPROVED PURSUANT TO NEW YORK TOWN LAW SECTION 278 AND SECTION 25–405(C) OF THE TOWN OF PITTSFORD CODE AND REFLECTS IN TOTAL THE PERMITTED NUMBER OF BUILDING LOTS ALLOWED. NO FURTHER SUBDIVISION OF LOTS IS PERMITTED.
5. APPLICATION SETBACKS/LOT STANDARDS ARE AS FOLLOWS:

MIN. LOT AREA	13,500 SF
FRONT YARD	40 FEET
SIDE YARD	10 FEET
REAR YARD	10 FEET
LOT WIDTH @ SETBACK	90 FEET
BUILDING HEIGHT	40 FEET (MAXIMUM)
IMPERVIOUS COVERAGE	33% (MAXIMUM)

7. TOTAL IMPERVIOUS AREA = 3.6± ACRES (BASED ON 33% MAXIMUM IMPERVIOUS LOT AREA)
   TOTAL DISTURBED AREA = 11.0± ACRES
8. THE SETBACK LINES AND NOTES RELATING TO SETBACK SHOWN HEREON ARE INTENDED TO SHOW APPLICABLE ZONING REQUIREMENTS. APPROVALS UNDER SECTION 278 OF TOWN LAW OF THE TOWN OF PITTSFORD AS OF THE DATE OF THIS MAP AND ARE NOT INTENDED TO IMPOSE ANY ADDITIONAL RESTRICTIONS OTHER THAN SAID ZONING REQUIREMENTS.
9. ALL IMPROVEMENTS SHALL BE IN ACCORDANCE WITH THE MOST RECENT STANDARDS AND SPECIFICATIONS OF THE TOWN OF PITTSFORD, THE APPROPRIATE AGENCIES (IE, MONROE COUNTY WATER AUTHORITY, AND THE MONROE COUNTY HEALTH DEPARTMENT) UNLESS OTHERWISE NOTED.
10. THE CONTRACTOR SHALL LOCATE, MARK, SAFEGUARD, AND PRESERVE ALL SURVEY CONTROL MONUMENTS AND RIGHT–OF–WAY MONUMENTS IN THE AREAS OF CONSTRUCTION. FOR DESCRIPTIVE AND SURVEY DATA ON THE CONTROL MONUMENTS, CALL THE MONROE COUNTY GEODETIC SURVEY OFFICE.
11. THE DEVELOPER'S AND CONTRACTOR'S ATTENTION IS DIRECTED TO LOCAL LAW NO. 6 OF 1971 REGARDING LIABILITY INCURRED THROUGH DISTURBANCES OR DESTRUCTION OF GEODETIC SURVEY MONUMENTS.
12. REVIEW OF THE FEMA MAPS DOES NOT INDICATE THIS PROPERTY TO BE WITHIN A RECOGNIZED 100–YEAR FLOODPLAIN.
13. THIS DEVELOPMENT MAY BORDER A FARM, AS DEFINED IN LOCAL LAW NO. 4–1992 RESIDENTS SHOULD BE AWARE THAT FARMERS HAVE THE RIGHT TO UNDERTAKE FARM PRACTICES WHICH MAY GENERATE DUST, ODOR, SMOKE, NOISE AND VIBRATION.
14. TEMPORARY ROAD SIGNS ARE TO BE PLACED FOR EMERGENCY IDENTIFICATION AS SOON AS CONSTRUCTION BEGINS. SITE ENTRANCES AND ROADWAYS MUST NOT BE BLOCKED TO IMPEDE EMERGENCY ACCESS AT ANY TIME DURING CONSTRUCTION.
15. DEVELOPER WILL INSTALL 4X4 PROPERTY MARKERS TO DELINEATE TOWN OWNED LANDS. THE TOWN WILL PURCHASE THE LUMBER, BEVEL, AND BRAND THE MARKERS, AND DELIVER THEM UPON REQUEST OF THE DEVELOPER.

MCDPH CONDIDITIONS OF APPROVAL FOR REALTY SUBDIVISIONS:

MONROE COUNTY DEPARTMENT OF PUBLIC HEALTH APPROVAL FOR THIS REALTY SUBDIVISION IS GRANTED ON CONDITION THAT:

1. THE PROPOSED FACILITIES FOR WATER SUPPLY AND SEWAGE TREATMENT ARE INSTALLED IN CONFORMITY WITH THE APPROVED PLANS ON FILE WITH THE MONROE COUNTY DEPARTMENT OF PUBLIC HEALTH (MCDPH).
2. AN ORIGINAL REALTY SUBDIVISION MAP APPROVED THIS DATE SHALL BE FILED IN THE OFFICE OF THE CLERK OF MONROE COUNTY PRIOR TO OFFERING LOTS FOR SALE.
3. THE OWNER OF THE REALTY SUBDIVISION SHALL FURNISH EACH PURCHASER OF A LOT WITH A COPY OF THE APPROVED PLAN OR, IN THE CASE OF SALE OF DEVELOPED LOTS, THE OWNER OF THE REALTY SUBDIVISIONS SHALL FURNISH EACH PURCHASER WITH AN ACCURATE "AS–BUILT" PLAN DEPICTING ALL INSTALLED FACILITIES INCLUDING SEWAGE, STORM WATER AND WATER SUPPLY.
4. ADEQUATE EROSION/SILTATION CONTROL MEASURES SHALL BE EMPLOYED PRIOR TO AND DURING CONSTRUCTION. IF THE PROJECT WILL RESULT IN THE DISTURBANCE OF ONE ACRE OR MORE, COVERAGE UNDER THE NYSDEC SPDES GENERAL PERMIT GP–0–20–001 FOR STORMWATER DISCHARGES FOR CONSTRUCTION ACTIVITIES SHALL BE OBTAINED.
5. NO LOT OR REMAINING LAND (IF APPLICABLE) SHALL BE SUBDIVIDED WITHOUT PLANS FOR SUCH RE–SUBDIVISION BEING SUBMITTED AND APPROVED BY THE MCDPH.
6. PLAN APPROVAL IS LIMITED TO 5 YEARS. TIME EXTENSIONS FOR PLAN APPROVAL MAY BE GRANTED BY MCDPH BASED UPON DEVELOPMENT FACTS AND THE REALTY SUBDIVISION REGULATIONS IN EFFECT AT THAT TIME. A NEW PLAN SUBMISSION MAY BE REQUIRED TO OBTAIN A TIME EXTENSION.
7. PRIVATE WELLS AND PRIVATE ONSITE WASTEWATER TREATMENT SYSTEMS SHALL NO LONGER BE CONSTRUCTED OR USED AFTER PUBLIC FACILITIES BECOME AVAILABLE.

I, the undersigned Treasurer of Monroe County Pursuant to Sec 334 of the Real Property Law Certify that all Monroe County Taxes and School Taxes against the land described herein have been paid through

Monroe County Treasurer

BY_____ Dated:_____

MONROE COUNTY DEPARTMENT OF PUBLIC HEALTH
REALTY SUBDIVISION APPROVAL

THIS IS TO CERTIFY THAT APPROVED PLANS FOR WATER SUPPLY AND SEWAGE TREATMENT FOR THIS PROJECT ARE ON FILE IN THE OFFICE OF THE MONROE COUNTY DEPARTMENT OF PUBLIC HEALTH CONSENT IS HEREBY GIVEN FOR THE FILING OF THIS MAP IN THE MONROE COUNTY CLERK'S OFFICE IN ACCORDANCE WITH ARTICLE III OF THE MONROE COUNTY SANITARY CODE.

DIRECTOR OF PUBLIC HEALTH

BY PUBLIC HEALTH ENGINEER DATE

Irondequoit Bay South Central Pure Waters District
Review Number _____
Conforms to Monroe County Pure Waters Master Plan
Signature Date

This plat is approved in accordance with the provisions of Section 239–f, Article 12–b of the General Municipal Law and/or the Monroe County Monumentation Law. A separate approval is required for site construction.

For the General Municipal Law:

County Highway Superintendent Date

For the Monroe County Monumentation Law:

Monroe County Surveyor's Office Date

NOT APPROVED

This plan has not received final approval of all reviewing agencies. This plan is subject to revisions until all approvals are obtained and should not be used for construction purposes.

STATE OF NEW YORK GREGORY D. BELL 050661 LICENSED LAND SURVEYOR

WE: BME ASSOCIATES, CERTIFY THAT THIS MAP WAS PREPARED FROM THE NOTES OF AN INSTRUMENT SURVEY COMPLETED BY US ON DECEMBER 19, 2023 AND FROM THE REFERENCES NOTED HEREON. THIS MAP OR PLAT AND THE SURVEY UPON WHICH IT WAS BASED MEETS THE GVLSA 2017 MINIMUM STANDARDS FOR A SURVEY MAP.

THIS MAP IS SUBJECT TO ANY FACTS THAT MAY BE REVEALED BY SOURCES OTHER THAN THOSE REFERENCED HEREON.

BY: GREGORY D. BELL, NYSPLS NO. 050661

APPROVALS

BY: DATE:
TOWN ENGINEER

BY: DATE:
COMMISSIONER OF PUBLIC WORKS

BY: DATE:
CHAIRMAN OF THE PLANNING BOARD

COPYRIGHT © 2024
BME Associates

Drawing Alteration
The following is an excerpt from the New York State Education Law Article 145 Section 7209 and applies to this drawing:
"It is a violation of this law for any person, unless he is acting under the direction of a licensed professional engineer or land surveyor to alter any item in any way. If an item bearing the seal of an engineer or land surveyor is altered, the altering engineer or land surveyor shall affix to the item his seal and the notation "altered by" followed by his signature and the date of such alteration, and a specific description of the alteration."

7			
6			
5			
4			
3	REVISED TO FINAL SUBDIVISION	9/19/25	AND
2	REVISED PER TOWN & AGENCY COMMENTS	8/1/24	BCG
1	REVISIONS	DATE	BY

BME ASSOCIATES
ENGINEERS • SURVEYORS • LANDSCAPE ARCHITECTS
10 LIFT BRIDGE LANE EAST
FAIRPORT, NEW YORK 14450
WWW.BMEPC.COM
585-377-7360

STATE OF NEW YORK GREGORY D. BELL 050661 LICENSED LAND SURVEYOR

PROJECT: COVENTRY RIDGE SUBDIVISION
SECTION 3
LOCATION: TOWN OF PITTSFORD, MONROE COUNTY, NEW YORK STATE
CLIENT: CLOVER STREET DEVELOPMENT CORPORATION
30 GROVE STREET
PITTSFORD, NY 14534
DRAWING TITLE: FINAL SUBDIVISION PLAT

PHELPS & GORHAM PURCHASE, TOWNSHIP 12, RANGE 5, TOWN LOT 46, TAX MAP NUMBER 177.03–5–47

PROJECT MANAGER	
P. VARS	
PROJECT SURVEYOR	
GD BELL	
DRAWN BY	
BC GOODING	
SCALE	DATE ISSUED
1" = 50'	APRIL 3, 2024
PROJECT NO.	
9502F	
DRAWING NO.	
02	

P:\9502F\Drawings\Final\9502F Design Base.dwg

LEGEND

- BOUNDARY LINE
- PROPOSED LOT LINE
- CENTERLINE
- SETBACK LINE
- EXISTING EASEMENT LINE
- PROPOSED EASEMENT LINE
- PROPERTY MARKER FOUND
- EXISTING WATERMAIN, HYDRANT, AND VALVE
- PROPOSED WATERMAIN, HYDRANT, AND VALVE
- PROPOSED WATER SERVICE AND CURBSTOP
- EXISTING STORM SEWER, MANHOLE, AND INLET
- PROPOSED STORM SEWER, MANHOLE, AND INLET
- EXISTING SANITARY SEWER AND MANHOLE
- PROPOSED SANITARY SEWER AND MANHOLE
- FEDERAL WETLAND DELINEATION DECEMBER 19, 2011
- FEDERAL WETLAND DELINEATION MARCH 25, 2024

SEE NOTE SHEET (BME DRAWING #9502F-08) FOR UTILITY NOTES

GUTTER INLET STRUCTURE TABLE

STRUCTURE NAME	DETAILS
DA-2R Gutter Inlet STA=10+03.90	RIM ELEV=653.30 INV IN=650.18 (NW) INV OUT=650.18 (S)
DA-2L Gutter Inlet STA=10+03.89	RIM ELEV=653.30 INV OUT=650.40 (SE)
DA-2.1R Gutter Inlet STA=12+79.65	RIM ELEV=656.20 INV IN=653.08 (NW) INV OUT=653.08 (S)
DA-2.1L Gutter Inlet STA=12+79.65	RIM ELEV=656.20 INV OUT=653.30 (SE)

GUTTER INLET STRUCTURE TABLE

STRUCTURE NAME	DETAILS
DA-1R Gutter Inlet STA=7+80.31	RIM ELEV=648.50 INV IN=645.37 (N) INV OUT=645.37 (E)
DA-1L Gutter Inlet STA=7+80.31	RIM ELEV=648.50 INV OUT=645.60 (S)
D-R Gutter Inlet STA=3+30.94	RIM ELEV=643.60 INV OUT=640.70 (E)
D-L Gutter Inlet STA=3+30.98	RIM ELEV=643.60 INV IN=640.47 (W) INV OUT=640.22 (SE)

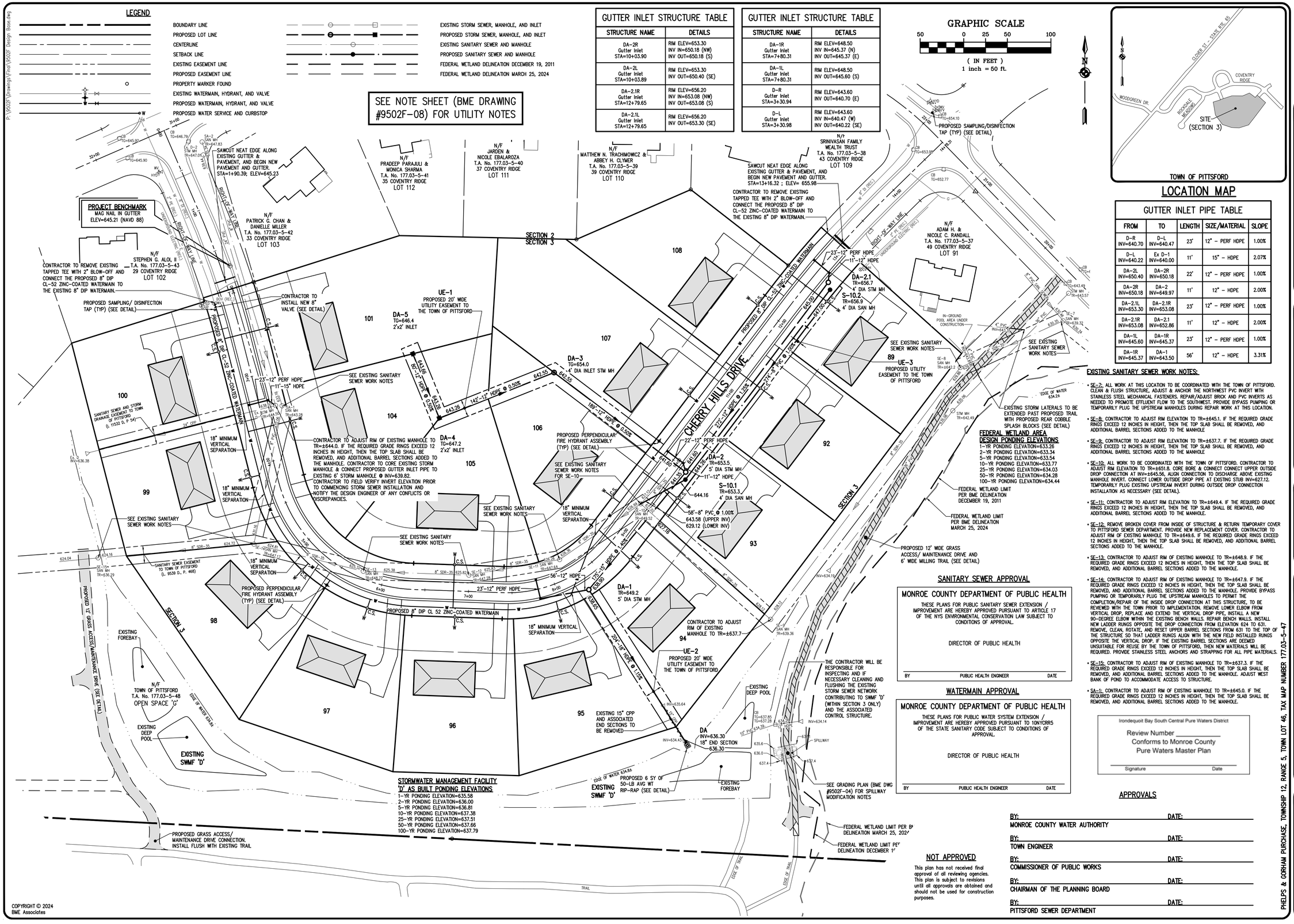

STORMWATER MANAGEMENT FACILITY 'D' AS BUILT PONDING ELEVATIONS

1-YR PONDING ELEVATION=635.58
2-YR PONDING ELEVATION=636.00
5-YR PONDING ELEVATION=636.81
10-YR PONDING ELEVATION=637.38
25-YR PONDING ELEVATION=637.51
50-YR PONDING ELEVATION=637.66
100-YR PONDING ELEVATION=637.79

FEDERAL WETLAND AREA DESIGN PONDING ELEVATIONS

1-YR PONDING ELEVATION=633.26
2-YR PONDING ELEVATION=633.34
5-YR PONDING ELEVATION=633.54
10-YR PONDING ELEVATION=633.77
25-YR PONDING ELEVATION=634.03
50-YR PONDING ELEVATION=634.28
100-YR PONDING ELEVATION=634.44

COPYRIGHT © 2024
BME Associates

LOCATION MAP

GUTTER INLET PIPE TABLE

FROM	TO	LENGTH	SIZE/MATERIAL	SLOPE
D-R INV=640.70	D-L INV=640.47	23'	12" - PERF HDPE	1.00%
D-L INV=640.22	Ex D-1 INV=640.00	11'	15" - HDPE	2.07%
DA-2L INV=650.40	DA-2R INV=650.18	22'	12" - PERF HDPE	1.00%
DA-2R INV=650.18	DA-2 INV=649.97	11'	12" - HDPE	2.00%
DA-2.1L INV=653.30	DA-2.1R INV=653.08	23'	12" - PERF HDPE	1.00%
DA-2.1R INV=653.08	DA-2.1 INV=652.86	11'	12" - HDPE	2.00%
DA-1L INV=645.60	DA-1R INV=645.37	23'	12" - PERF HDPE	1.00%
DA-1R INV=645.37	DA-1 INV=643.50	56'	12" - HDPE	3.31%

EXISTING SANITARY SEWER WORK NOTES:

- SE-7: ALL WORK AT THIS LOCATION TO BE COORDINATED WITH THE TOWN OF PITTSFORD. CLEAN & FLUSH STRUCTURE, ADJUST & ANCHOR THE NORTHWEST PVC INVERT WITH STAINLESS STEEL MECHANICAL FASTENERS. REPAIR/ADJUST BRICK AND PVC INVERTS AS NEEDED TO PROMOTE EFFLUENT FLOW TO THE SOUTHWEST. PROVIDE BYPASS PUMPING OR TEMPORARILY PLUG THE UPSTREAM MANHOLES DURING REPAIR WORK AT THIS LOCATION.
- SE-8: CONTRACTOR TO ADJUST RIM ELEVATION TO TR=±645.1. IF THE REQUIRED GRADE RINGS EXCEED 12 INCHES IN HEIGHT, THEN THE TOP SLAB SHALL BE REMOVED, AND ADDITIONAL BARREL SECTIONS ADDED TO THE MANHOLE
- SE-9: CONTRACTOR TO ADJUST RIM ELEVATION TO TR=±637.7. IF THE REQUIRED GRADE RINGS EXCEED 12 INCHES IN HEIGHT, THEN THE TOP SLAB SHALL BE REMOVED, AND ADDITIONAL BARREL SECTIONS ADDED TO THE MANHOLE
- SE-10: ALL WORK TO BE COORDINATED WITH THE TOWN OF PITTSFORD. CONTRACTOR TO ADJUST RIM ELEVATION TO TR=±651.8. CORE BORE & CONNECT CONNECT UPPER OUTSIDE DROP CONNECTION AT INV=±645.56. ALIGN CONNECTION TO DISCHARGE ABOVE EXISTING MANHOLE INVERT. CONNECT LOWER OUTSIDE DROP PIPE AT EXISTING STUB INV=627.12. TEMPORARILY PLUG EXISTING UPSTREAM INVERT DURING OUTSIDE DROP CONNECTION INSTALLATION AS NECESSARY (SEE DETAIL).
- SE-11: CONTRACTOR TO ADJUST RIM ELEVATION TO TR=±649.4. IF THE REQUIRED GRADE RINGS EXCEED 12 INCHES IN HEIGHT, THEN THE TOP SLAB SHALL BE REMOVED, AND ADDITIONAL BARREL SECTIONS ADDED TO THE MANHOLE.
- SE-12: REMOVE BROKEN COVER FROM INSIDE OF STRUCTURE & RETURN TEMPORARY COVER TO PITTSFORD SEWER DEPARTMENT. PROVIDE NEW REPLACEMENT COVER. CONTRACTOR TO ADJUST RIM OF EXISTING MANHOLE TO TR=±649.6. IF THE REQUIRED GRADE RINGS EXCEED 12 INCHES IN HEIGHT, THEN THE TOP SLAB SHALL BE REMOVED, AND ADDITIONAL BARREL SECTIONS ADDED TO THE MANHOLE.
- SE-13: CONTRACTOR TO ADJUST RIM OF EXISTING MANHOLE TO TR=±648.9. IF THE REQUIRED GRADE RINGS EXCEED 12 INCHES IN HEIGHT, THEN THE TOP SLAB SHALL BE REMOVED, AND ADDITIONAL BARREL SECTIONS ADDED TO THE MANHOLE.
- SE-14: CONTRACTOR TO ADJUST RIM OF EXISTING MANHOLE TO TR=±647.9. IF THE REQUIRED GRADE RINGS EXCEED 12 INCHES IN HEIGHT, THEN THE TOP SLAB SHALL BE REMOVED, AND ADDITIONAL BARREL SECTIONS ADDED TO THE MANHOLE. PROVIDE BYPASS PUMPING OR TEMPORARILY PLUG THE UPSTREAM MANHOLES TO PERMIT THE COMPLETION/REPAIR OF THE INSIDE DROP CONNECTION AT THIS STRUCTURE, TO BE REVIEWED WITH THE TOWN PRIOR TO IMPLEMENTATION. REMOVE LOWER ELBOW FROM VERTICAL DROP, REPLACE AND EXTEND THE VERTICAL DROP PIPE, INSTALL A NEW 90-DEGREE ELBOW WITHIN THE EXISTING BENCH WALLS. REPAIR BENCH WALLS. INSTALL NEW LADDER RUNGS OPPOSITE THE DROP CONNECTION FROM ELEVATION 624 TO 631. REMOVE, CLEAN, ROTATE, AND RESET UPPER BARREL SECTIONS FROM 631 TO THE TOP OF THE STRUCTURE SO THAT LADDER RUNGS ALIGN WITH THE NEW FIELD INSTALLED RUNGS OPPOSITE THE VERTICAL DROP. IF THE EXISTING BARREL SECTIONS ARE DEEMED UNSUITABLE FOR REUSE BY THE TOWN OF PITTSFORD, THEN NEW MATERIALS WILL BE REQUIRED. PROVIDE STAINLESS STEEL ANCHORS AND STRAPPING FOR ALL PIPE MATERIALS.
- SE-15: CONTRACTOR TO ADJUST RIM OF EXISTING MANHOLE TO TR=±637.3. IF THE REQUIRED GRADE RINGS EXCEED 12 INCHES IN HEIGHT, THEN THE TOP SLAB SHALL BE REMOVED, AND ADDITIONAL BARREL SECTIONS ADDED TO THE MANHOLE. ADJUST WEST BANK OF POND TO ACCOMMODATE ACCESS TO STRUCTURE.
- SA-1: CONTRACTOR TO ADJUST RIM OF EXISTING MANHOLE TO TR=±645.0. IF THE REQUIRED GRADE RINGS EXCEED 12 INCHES IN HEIGHT, THEN THE TOP SLAB SHALL BE REMOVED, AND ADDITIONAL BARREL SECTIONS ADDED TO THE MANHOLE.

SANITARY SEWER APPROVAL

MONROE COUNTY DEPARTMENT OF PUBLIC HEALTH

THESE PLANS FOR PUBLIC SANITARY SEWER EXTENSION / IMPROVEMENT ARE HEREBY APPROVED PURSUANT TO ARTICLE 17 OF THE NYS ENVIRONMENTAL CONSERVATION LAW SUBJECT TO CONDITIONS OF APPROVAL.

DIRECTOR OF PUBLIC HEALTH

BY PUBLIC HEALTH ENGINEER DATE

WATERMAIN APPROVAL

MONROE COUNTY DEPARTMENT OF PUBLIC HEALTH

THESE PLANS FOR PUBLIC WATER SYSTEM EXTENSION / IMPROVEMENT ARE HEREBY APPROVED PURSUANT TO 10NYCRR5 OF THE STATE SANITARY CODE SUBJECT TO CONDITIONS OF APPROVAL.

DIRECTOR OF PUBLIC HEALTH

BY PUBLIC HEALTH ENGINEER DATE

Irondequoit Bay South Central Pure Waters District

Review Number _____
Conforms to Monroe County Pure Waters Master Plan

Signature Date

NOT APPROVED

This plan has not received final approval of all reviewing agencies. This plan is subject to revisions until all approvals are obtained and should not be used for construction purposes.

APPROVALS

BY: DATE:
MONROE COUNTY WATER AUTHORITY

BY: DATE:
TOWN ENGINEER

BY: DATE:
COMMISSIONER OF PUBLIC WORKS

BY: DATE:
CHAIRMAN OF THE PLANNING BOARD

BY: DATE:
PITTSFORD SEWER DEPARTMENT

Drawing Alteration
The following is an excerpt from the New York State Education Law Article 145 Section 7209 and applies to this drawing:
"It is a violation of this law for any person, unless he is acting under the direction of a licensed professional engineer or land surveyor to alter any item in any way. If an item bearing the seal of an engineer or land surveyor is altered, the altering engineer or land surveyor shall affix to the item his seal and the notation "altered by" followed by his signature and the date of such alteration, and a specific description of the alteration."

	DATE	BY	REVISIONS
7			
6			
5			
4			
3	9/19/25	AND	REVISED PER TOWN & AGENCY COMMENTS & GRADING
2	8/2/24	AND	REVISED PER TOWN & AGENCY COMMENTS
1			

BME ASSOCIATES
ENGINEERS • SURVEYORS • LANDSCAPE ARCHITECTS
10 LIFT BRIDGE LANE EAST
FAIRPORT, NEW YORK 14450
WWW.BMEPC.COM
585-377-7360

STATE OF NEW YORK
LICENSED PROFESSIONAL ENGINEER
058610

PROJECT: COVENTRY RIDGE SUBDIVISION
SECTION 3
LOCATION: TOWN OF PITTSFORD, MONROE COUNTY, NEW YORK STATE
CLIENT: CLOVER STREET DEVELOPMENT CORPORATION
30 GROVE STREET
PITTSFORD, NY 14534
DRAWING TITLE: FINAL UTILITY PLAN

PHELPS & GORHAM PURCHASE, TOWNSHIP 12, RANGE 5, TOWN LOT 46, TAX MAP NUMBER 177.03-5-47

PROJECT MANAGER	P. VARS
PROJECT ENGINEER	F. SHELLEY
DRAWN BY	A. D'ANGELO
SCALE	1" = 50'
DATE ISSUED	APRIL 3, 2024
PROJECT NO.	9502F
DRAWING NO.	03

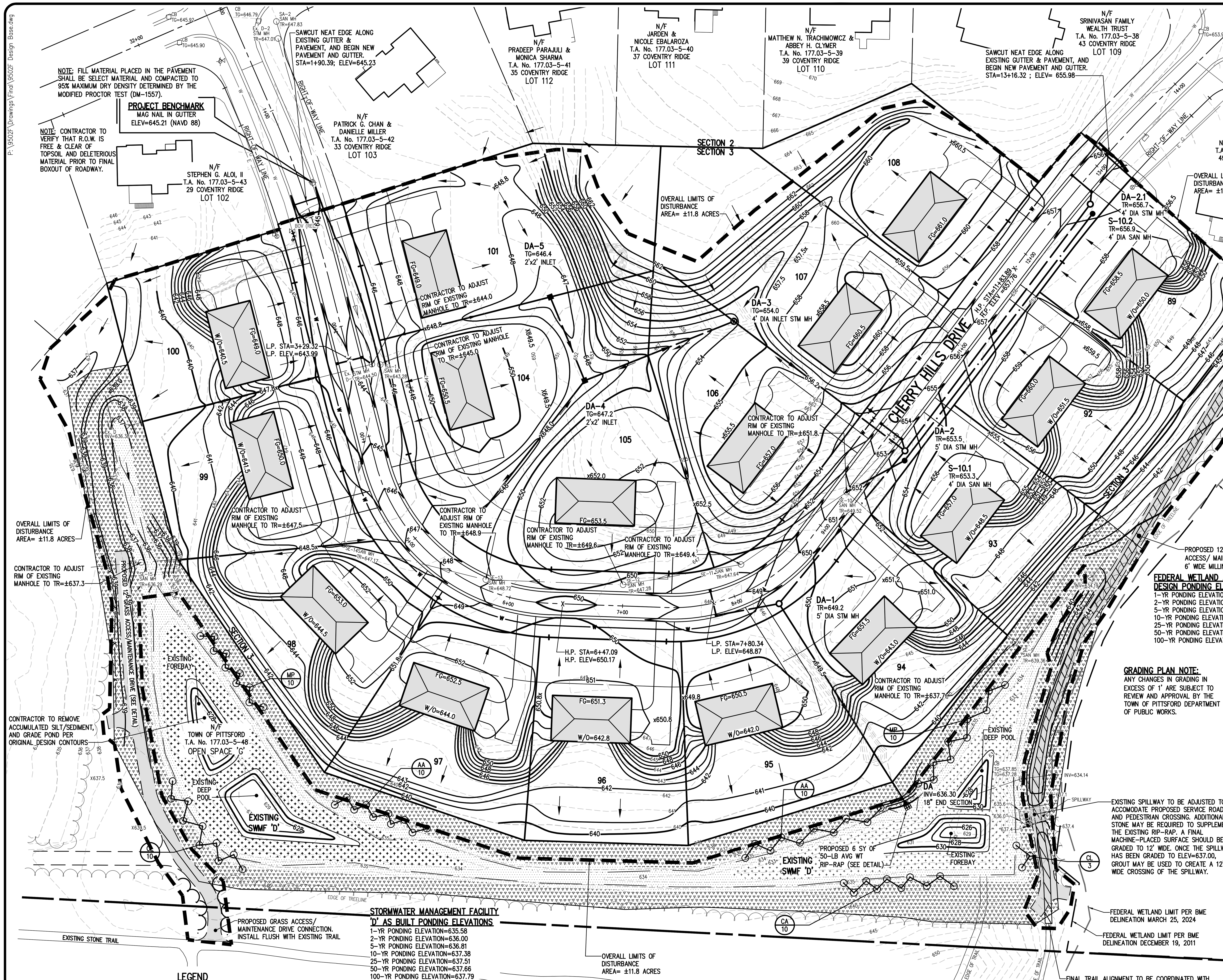

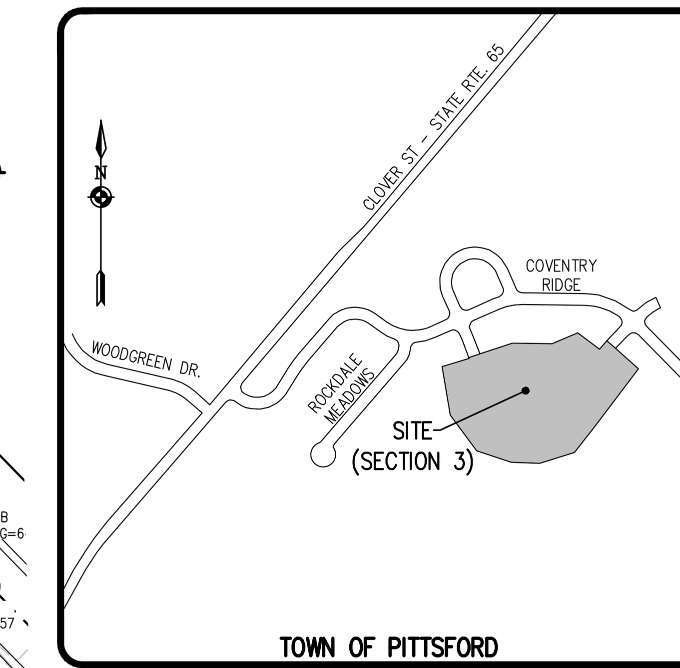

LOCATION MAP

SEE UTILITY PLAN SHEET (BME DRAWING #9502F-03) EXISTING SANITARY SEWER WORK NOTES FOR RIM ADJUSTMENTS.

MASS GRADING NOTES:

1. THE GRADING DESIGN ASSUMES A NON-STRUCTURAL SOIL STRIPPING (MIX OF TOPSOIL, VEGETATION, AND SUBSOIL) DEPTH OF 12 INCHES WITHIN THE R.O.W. IF SITE CONDITIONS DEVIATE FROM THIS BY MORE THAN 3", THE CONTRACTOR IS TO NOTIFY THE OWNER AND ENGINEER.
2. NON-STRUCTURAL SOIL AND/OR TOPSOIL IS TO BE STRIPPED FROM PROPOSED BUILDING AND PAVEMENT AREAS. NON-STRUCTURAL SOIL AND/OR TOPSOIL IS ALSO TO BE STRIPPED FROM ALL CUT AREAS.
3. UPON REQUEST FROM THE OWNER, THE ENGINEER WILL VERIFY THE TOPSOIL STOCKPILE VOLUME TO DETERMINE ACTUAL VOLUME OF TOPSOIL STRIPPED. THE CONTRACTOR SHALL NOTIFY THE ENGINEER WHEN THE TOPSOIL STOCKPILE IS COMPLETE AND BEFORE BEGINNING THE MASS GRADING OPERATIONS.
4. LOTS 101, 102, AND 104-108 TO BE MASS GRADED AT AN ELEVATION 1.5' BELOW FINISH GRADE (FG). MASS GRADE AREAS FOR THESE LOTS SHALL BE A 130' DEEP ARE FROM 10' BEYOND THE RIGHT-OF-WAY LINE TO 140' BEYOND THE RIGHT-OF-WAY LINE.
5. LOTS 89 AND 92 THROUGH 100 TO BE MASS GRADED AS FOLLOWS: FRONT YARDS ARE TO BE MASS GRADED TO AN ELEVATION 1.5' BELOW FINISH GRADE (FG) FROM ±15' BEYOND THE RIGHT-OF-WAY TO THE FRONT OF THE HOUSE PAD. HOUSE PAD SHOULD BE MASS GRADED TO SLOPE FROM 1.5' BELOW FINISH GRADE AT THE FRONT TO 3' ABOVE WALKOUT ELEVATION AT THE REAR. DRIVEWAYS ARE TO BE MASS GRADED TO 1' BELOW FG AT THE FRONT OF THE HOUSE AND SLOPED TO 6' BELOW GARAGE FINISH GRADE AT THE REAR OF THE HOUSE. REAR SLOPES BEHIND DRIVEWAYS ARE TO BE MASS GRADED FROM 6' BELOW GARAGE FINISH GRADE AT REAR TO 0' BELOW FINISH GRADE AT THE TOE OF THE SLOPE.
6. ALL OTHER OPEN AREAS SHALL BE MASS GRADED 0.5' BELOW FINISH GRADE.
7. ROAD BOX TO BE MASS GRADED 16.5" BELOW FINISH GRADE.
8. ALL DISTURBED AREAS TO BE RECLAIMED WITH MINIMUM 6" OF TOPSOIL. PROPOSED GRADES TO BE MASS GRADED 6" LOW FOR TOPSOIL REPLACEMENT.
9. THE EARTHWORK ANALYSIS IS BASED ON ASSUMPTIONS FOR TOPSOIL DEPTH, SHRINKAGE AND COMPACTION. ACTUAL FIELD CONDITIONS MAY VARY FROM THE ASSUMPTIONS MADE FOR THE ANALYSIS. THE CONTRACTOR SHALL NOTIFY THE OWNER AND ENGINEER IF CONDITIONS VARY FROM THE DESIGN PARAMETERS.
10. CONTRACTOR SHALL REVIEW CONDITION OF STRIPPED, NON-STRUCTURAL MATERIAL WITH OWNER FOR CONSIDERATION OF USE FOR TOPSOIL REPLACEMENT. STRIPPED MATERIAL MAY BE MIXED WITH TOPSOIL UPON OWNER REVIEW.
11. CONTRACTOR TO PROVIDE POSITIVE DRAINAGE AWAY FROM PROPOSED HOME SITES.

LANDSCAPE NOTES:

1. ALL PLANTS SHALL MEET OR EXCEED THE MINIMUM REQUIREMENTS AS NOTED IN THE LATEST EDITION OF THE AMERICAN STANDARD FOR NURSERY STOCK BY THE AMERICAN NURSERY & LANDSCAPE ASSOCIATION, ANSI Z60.1-2004.
2. THE CONTRACTOR SHALL BE RESPONSIBLE FOR HIS OWN QUANTITY TAKEOFFS.
3. THE CONTRACTOR SHALL BE RESPONSIBLE FOR VERIFYING UNDERGROUND UTILITIES PRIOR TO THE START OF CONSTRUCTION.
4. ALL TREES SHALL BE LOCATED A MINIMUM DISTANCE OF FIVE FEET (5') FROM THE HORIZONTAL LINE OF UNDERGROUND UTILITIES TO THE PLANT BALL.
5. ALL TREES SHALL BE LOCATED A MINIMUM DISTANCE OF TEN FEET (10') FROM THE HORIZONTAL LINE OF OVERHEAD UTILITIES TO THE PLANT BALL.
6. PLANTING SOIL MIXTURE SHALL HAVE A RATIO BY VOLUME OF FOUR PARTS TOPSOIL TO ONE PART PEAT. SOIL AMENDMENTS TO BE MODIFIED PER INDIVIDUAL PLANT MATERIAL REQUIREMENTS.
7. STAKE TREES IMMEDIATELY AFTER PLANTING. REFER TO DETAIL.
8. PROVIDE ALL PLANTING BEDS WITH A CONTINUOUS 3" LAYER OF MULCH. MULCH SHALL BE PROVIDED AS FOLLOWS: 100 % SHREDDED HARDWOOD MULCH, NO GREATER THAN 1" IN SIZE, UNIFORMLY MIXED AND FREE FROM DELETERIOUS MATERIAL.
9. SEED ALL AREAS NOT PAVED, PLANTED OR SPECIFIED OTHERWISE WITH LAWN SEED.

   A. LAWN SEED MIXTURE SHALL BE PROVIDED AS FOLLOWS:

	% BY WEIGHT	% BY PURITY	% GERM
'REPELL', 'CITATION' & 'MORNING STAR' PERENNIAL RYE GRASS	40	85	85
'JAMESTOWN II', 'FORTRESS', 'ENSYLVA' RED FESCUE	20	97	80
'BARON' & 'MIDNIGHT' KENTUCKY BLUEGRASS	40	85	80

   SEEDING RATE: 6.0 LBS PER 1,000 SF.
   MULCH: STRAW AT TWO TONS PER ACRE, OR WOOD FIBER MULCH USED WITH A HYDROSEEDING APPLICATION METHOD, WITH TACKIFIER.
   STARTING FERTILIZER: 5:10:10 AT 20 LBS PER 1,000 SF.

   PLEASE REFER TO BME DRAWING # 9502E-08 EROSION CONTROL PLAN FOR FURTHER SEEDING REQUIREMENTS IE. : TEMPORARY SEEDING AND SPECIALIZED SEED MIXES.

10. PROPOSED PLANT MATERIALS SHALL BE FIELD LOCATED, AND THE CONTRACTOR SHALL PERFORM A ROUGH STAKEOUT OF PLANTINGS FOR REVIEW AND APPROVAL BY OWNER PRIOR TO PLANTING.
11. THE CONTRACTOR SHALL BE RESPONSIBLE FOR CARE AND MAINTENANCE OF PLANT MATERIALS AND SEEDED AREAS UNTIL FINAL ACCEPTANCE.
12. A MINIMUM 1 YEAR GUARANTEE SHALL BE PROVIDED ON ALL PLANT MATERIALS FROM DATE OF FINAL ACCEPTANCE.

SEE DETAIL SHEET (BME DRAWING #9502F-11) FOR SHRUB PLANTING DETAIL

PLANT MATERIALS LIST

QTY.	KEY	BOTANICAL NAME	COMMON NAME	SIZE	ROOT	COMMENTS
SHRUBS						
20	AA	Aronia arbutifolia 'Brilliantissima'	Brilliant Red Chokeberry	24"	BR	
10	CA	Cornus amomum	Silky Dogwood	24"	BR	
20	MP	Myrica pensylvanica	Northern bayberry	24"	BR	
3	CL	Clethra alnifolia	Summersweet Clethra	24"	BR	

LEGEND

- BOUNDARY LINE
- PROPOSED LOT LINE
- CENTERLINE
- SETBACK LINE
- EXISTING WATERMAIN, HYDRANT, AND VALVE
- PROPOSED WATERMAIN, HYDRANT, AND VALVE
- EXISTING STORM SEWER, MANHOLE, AND INLET
- PROPOSED STORM SEWER, MANHOLE, AND INLET
- EXISTING SANITARY SEWER AND MANHOLE
- PROPOSED SANITARY SEWER AND MANHOLE
- EXISTING TREE LINE
- PROPOSED TREE LINE
- 336 — EXISTING CONTOUR W/ ELEVATION
- 336 — PROPOSED CONTOUR W/ ELEVATION
- 336x5 — PROPOSED SPOT ELEVATION
- FG = 336.0 — PROPOSED FINISHED GRADE

GRAPHIC SCALE

50 0 25 50 100

(IN FEET)
1 inch = 50 ft.

LEGEND

- x L.P. — PROPOSED LOW POINT OF ROAD
- x H.P. — PROPOSED HIGH POINT OF ROAD
- FEDERAL WETLAND DELINEATION DECEMBER 19, 2011
- FEDERAL WETLAND DELINEATION MARCH 25, 2024

WETLAND/STORMWATER POND SEED MIXES

STORMWATER MANAGEMENT POND WETLAND MEADOW MIX: ERNMX-122
STORMWATER POND UPPER BENCH AND SLOPE AREA TO BE SEEDED WITH WETLAND MEADOW MIX, ERNST SEED MIX# ERNMX-122 (SEEDING RATE 15 LBS PER ACRE OR 1/3-½ LB PER 1000 SF.)

STORMWATER MANAGEMENT POND WETLAND SEED MIX: ERNMX-131
THE STORMWATER MANAGEMENT POND WETLAND BENCH AREA TO BE SEEDED USING THE "OBL WETLAND MIX" BY ERNST CONSERVATION SEEDS, OR APPROVED EQUIVALENT. (SEEDING RATE IS TO BE 15 LBS. PER ACRE OR 1/3 LB. TO 1/2 LB. PER 1,000 SQ. FT.)

STORMWATER MANAGEMENT POND 50' WIDE VEGETATIVE BUFFER SEED MIX: ERNMX-123
NATIVE WILDLIFE FORAGE AND COVER MEADOW MIX, ERNST CONSERVATION SEED; "NATIVE WILDLIFE FORAGE AND COVER MEADOW MIX." (SEEDING RATE IS TO BE 15 LBS. PER ACRE OR 1/2 LB. PER 1,000 SQ. FT.)

NOT APPROVED

This plan has not received final approval of all reviewing agencies. This plan is subject to revisions until all approvals are obtained and should not be used for construction purposes.

BY: ____________ DATE: ____________
TOWN ENGINEER

BY: ____________ DATE: ____________
COMMISSIONER OF PUBLIC WORKS

BY: ____________ DATE: ____________
CHAIRMAN OF THE PLANNING BOARD

COPYRIGHT © 2024
BME Associates

P:\9502F\Drawings\Final\9502F Design Base.dwg

PHELPS & GORHAM PURCHASE, TOWNSHIP 12, RANGE 5, TOWN LOT 46, TAX MAP NUMBER 177.03-5-47

Drawing Alteration
The following is an excerpt from the New York State Education Law Article 145 Section 7209 and applies to this drawing:
"It is a violation of this law for any person, unless he is acting under the direction of a licensed professional engineer or land surveyor to alter any item in any way. If an item bearing the seal of an engineer or land surveyor is altered, the altering engineer or land surveyor shall affix to the item his seal and the notation "altered by" followed by his signature and the date of such alteration, and a specific description of the alteration."

	REVISIONS	DATE	BY
7			
6			
5			
4			
3			
2	REVISED PER TOWN & AGENCY COMMENTS & GRADING	9/19/25	AND
1	REVISED PER TOWN & AGENCY COMMENTS	8/2/24	AND

BME ASSOCIATES
ENGINEERS • SURVEYORS • LANDSCAPE ARCHITECTS
10 LIFT BRIDGE LANE EAST
FAIRPORT, NEW YORK 14450
WWW.BMEPC.COM
585-377-7360

STATE OF NEW YORK — PETER G. VARS — 068010 — LICENSED PROFESSIONAL ENGINEER

PROJECT: COVENTRY RIDGE SUBDIVISION SECTION 3
LOCATION: TOWN OF PITTSFORD, MONROE COUNTY, NEW YORK STATE
CLIENT: CLOVER STREET DEVELOPMENT CORPORATION, 30 GROVE STREET, PITTSFORD, NY 14534
DRAWING TITLE: FINAL GRADING PLAN

PROJECT MANAGER: P. VARS
PROJECT ENGINEER: F. SHELLEY
DRAWN BY: A. D'ANGELO
SCALE: 1" = 50'
DATE ISSUED: APRIL 3, 2024
PROJECT NO.: 9502F
DRAWING NO.: 04

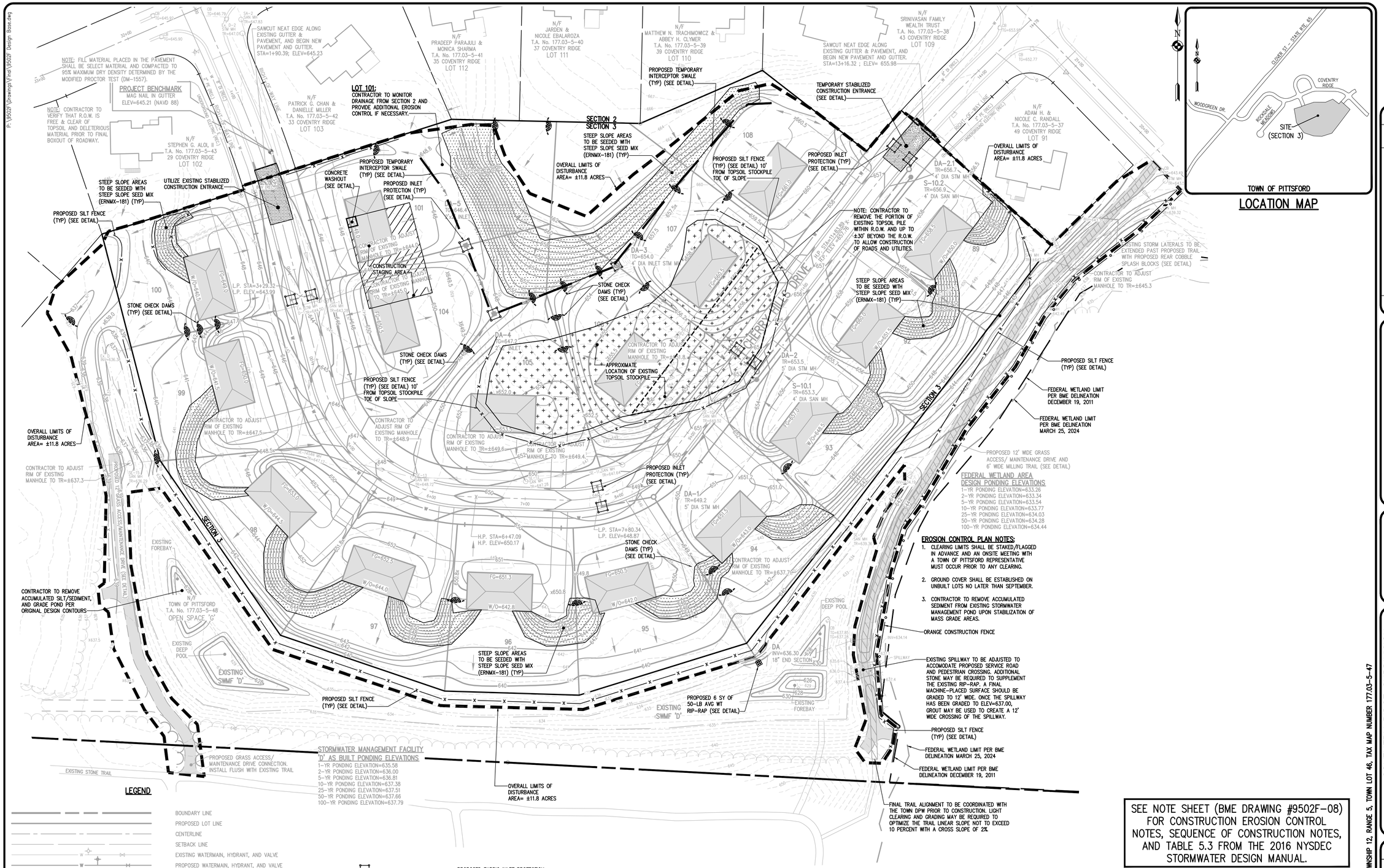

COPYRIGHT © 2024
BME Associates

SEE NOTE SHEET (BME DRAWING #9502F-08) FOR CONSTRUCTION EROSION CONTROL NOTES, SEQUENCE OF CONSTRUCTION NOTES, AND TABLE 5.3 FROM THE 2016 NYSDEC STORMWATER DESIGN MANUAL.

NOT APPROVED

This plan has not received final approval of all reviewing agencies. This plan is subject to revisions until all approvals are obtained and should not be used for construction purposes.

APPROVALS

BY: DATE:
TOWN ENGINEER

BY: DATE:
COMMISSIONER OF PUBLIC WORKS

BY: DATE:
CHAIRMAN OF THE PLANNING BOARD

Drawing Alteration

The following is an excerpt from the New York State Education Law Article 145 Section 7209 and applies to this drawing:

"It is a violation of this law for any person, unless he is acting under the direction of a licensed professional engineer or land surveyor to alter any item in any way. If an item bearing the seal of an engineer or land surveyor is altered, the altering engineer or land surveyor shall affix to the item his seal and the notation "altered by" followed by his signature and the date of such alteration, and a specific description of the alteration."

	DATE	BY	REVISIONS
7			
6			
5			
4			
3	9/19/25	AND	REVISED PER TOWN & AGENCY COMMENTS & GRADING
2	8/2/24	AND	REVISED PER TOWN & AGENCY COMMENTS
1			

BME ASSOCIATES
ENGINEERS • SURVEYORS • LANDSCAPE ARCHITECTS
10 LIFT BRIDGE LANE EAST
FAIRPORT, NEW YORK 14450
WWW.BMEPC.COM
PHONE 585-377-7360
FAX 585-377-7309

STATE OF NEW YORK
FRED G. CARLSON JR.
085680.10
LICENSED PROFESSIONAL ENGINEER

PROJECT: COVENTRY RIDGE SUBDIVISION
SECTION 3
LOCATION: TOWN OF PITTSFORD, MONROE COUNTY, NEW YORK STATE
CLIENT: CLOVER STREET DEVELOPMENT CORPORATION
30 GROVE STREET
PITTSFORD, NY 14534
DRAWING TITLE: FINAL CONSTRUCTION EROSION CONTROL PLAN

PROJECT MANAGER: P. VARS
PROJECT ENGINEER: F. SHELLEY
DRAWN BY: A. D'ANGELO
SCALE: 1" = 50'
DATE ISSUED: APRIL 3, 2024
PROJECT NO.: 9502F
DRAWING NO.: 05

PHELPS & GORHAM PURCHASE, TOWNSHIP 12, RANGE 5, TOWN LOT 46, TAX MAP NUMBER 177.03-5-47

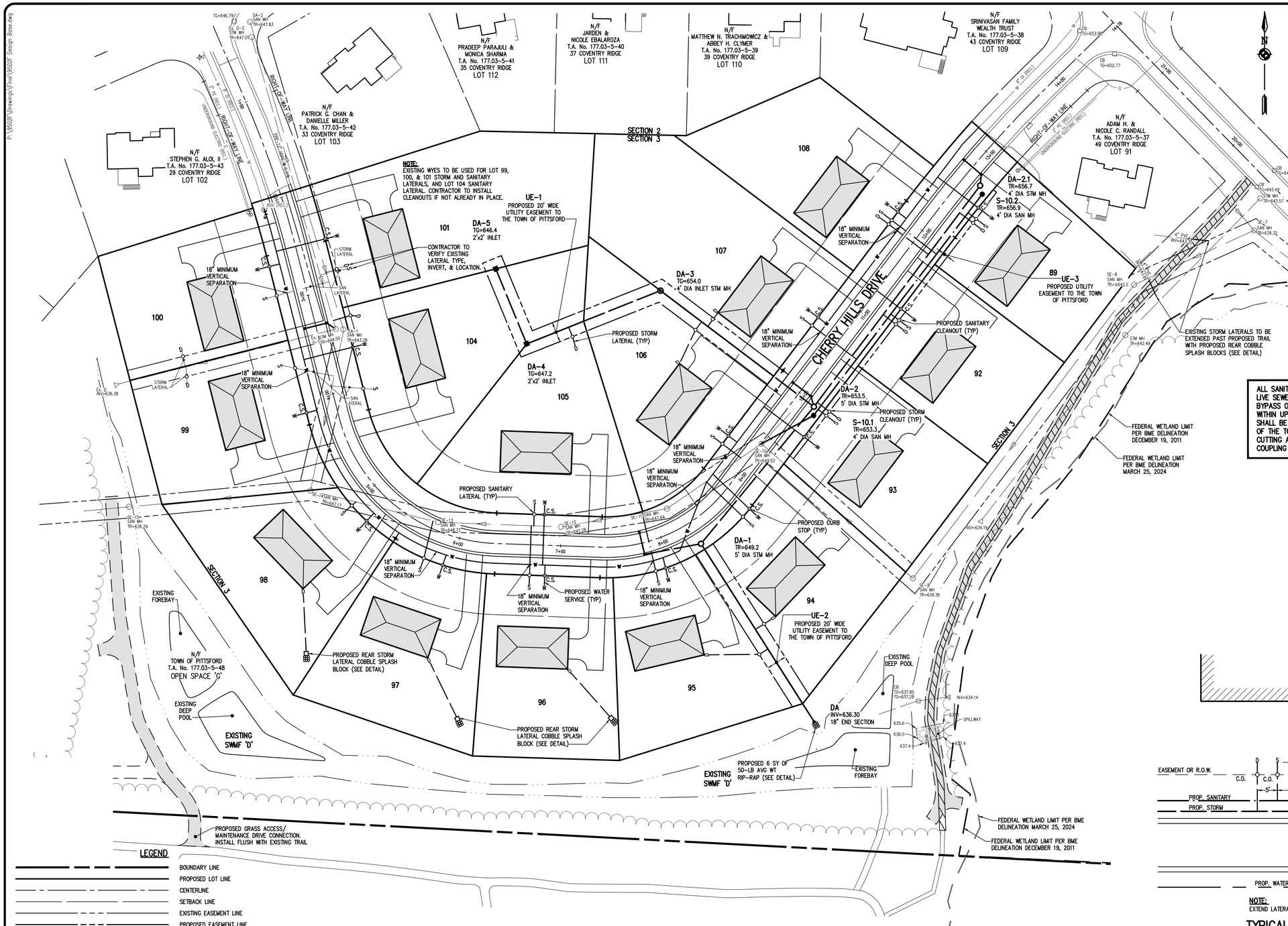

ALL SANITARY SEWER LATERAL CONNECTIONS TO THE EXISTING LIVE SEWER SHALL BE COORDINATED DURING SEWER MAIN BYPASS OPERATIONS OR BY PROVIDING A TEMPORARY PLUG WITHIN UPSTREAM SEWERS. THE LATERAL CONNECTIONS SHALL SHALL BE COORDINATED AND CONSTRUCTED IN THE PRESENCE OF THE TOWN OF PITTSFORD INSPECTOR AND COMPLETED BY CUTTING AND INSTALLING A NEW PVC WYE. USE OF A SLIP COUPLING IS REQUIRED.

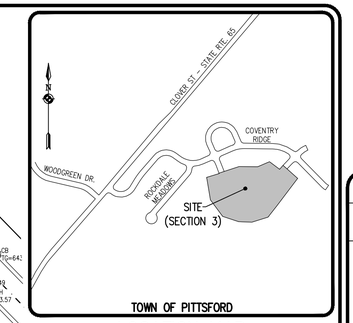

TOWN OF PITTSFORD

LOCATION MAP

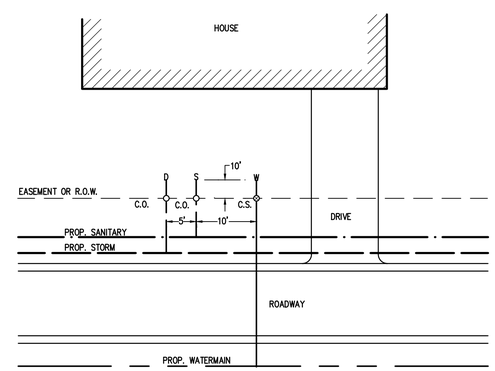

NOTE:
EXTEND LATERALS 10' PAST R.O.W. OR EASEMENT LINE.

TYPICAL LATERAL LAYOUT

N.T.S.

LEGEND

- BOUNDARY LINE
- PROPOSED LOT LINE
- CENTERLINE
- SETBACK LINE
- EXISTING EASEMENT LINE
- PROPOSED EASEMENT LINE
- PROPERTY MARKER FOUND
- EXISTING WATERMAIN, HYDRANT, AND VALVE
- PROPOSED WATERMAIN, HYDRANT, AND VALVE
- W — PROPOSED WATER SERVICE AND CURBSTOP
- EXISTING STORM SEWER, MANHOLE, AND INLET
- PROPOSED STORM SEWER, MANHOLE, AND INLET
- D — PROPOSED STORM SEWER LATERAL AND CLEANOUT
- EXISTING SANITARY SEWER AND MANHOLE
- PROPOSED SANITARY SEWER AND MANHOLE
- S — PROPOSED SANITARY SEWER LATERAL AND CLEANOUT
- FEDERAL WETLAND DELINEATION DECEMBER 19, 2011
- FEDERAL WETLAND DELINEATION MARCH 25, 2024

COPYRIGHT © 2024
BME Associates

SEE NOTE SHEET (BME DRAWING #9502F-08) FOR UTILITY NOTES

GRAPHIC SCALE

50 0 25 50 100

(IN FEET)
1 inch = 50 ft.

NOT APPROVED

This plan has not received final approval of all reviewing agencies. This plan is subject to revisions until all approvals are obtained and should not be used for construction purposes.

APPROVALS

BY: DATE:
TOWN ENGINEER

BY: DATE:
COMMISSIONER OF PUBLIC WORKS

BY: DATE:
CHAIRMAN OF THE PLANNING BOARD

Drawing Alteration
The following is an excerpt from the New York State Education Law Article 145 Section 7209 and applies to this drawing:
"It is a violation of this law for any person, unless he is acting under the direction of a licensed professional engineer or land surveyor to alter any item in any way. If an item bearing the seal of an engineer or land surveyor is altered, the altering engineer or land surveyor shall affix to the item his seal and the notation "altered by" followed by his signature and the date of such alteration, and a specific description of the alteration."

	DATE	BY	REVISIONS
7			
6			
5			
4			
3	9/19/25	AND	REVISED PER TOWN & AGENCY COMMENTS & GRADING
2	8/2/24	AND	REVISED PER TOWN & AGENCY COMMENTS
1			

BME ASSOCIATES
ENGINEERS • SURVEYORS • LANDSCAPE ARCHITECTS
10 LIFT BRIDGE LANE EAST
FAIRPORT, NEW YORK 14450
WWW.BMEPC.COM
585-377-7360

STATE OF NEW YORK
FRANK A. SHELLEY
068010
LICENSED PROFESSIONAL ENGINEER

PROJECT: COVENTRY RIDGE SUBDIVISION
SECTION 3
LOCATION: TOWN OF PITTSFORD, MONROE COUNTY, NEW YORK STATE
CLIENT: CLOVER STREET DEVELOPMENT CORPORATION
30 GROVE STREET
PITTSFORD, NY 14534
DRAWING TITLE: FINAL LATERAL PLAN

PROJECT MANAGER	
P. VARS	
PROJECT ENGINEER	
F. SHELLEY	
DRAWN BY	
A. D'ANGELO	
SCALE	DATE ISSUED
1" = 50'	APRIL 3, 2024
PROJECT NO.	
9502F	
DRAWING NO.	
06	

PHELPS & GORHAM PURCHASE, TOWNSHIP 12, RANGE 5, TOWN LOT 46, TAX MAP NUMBER 177.03-5-47

P:\9502F\Drawings\Final\9502F Design Base.dwg

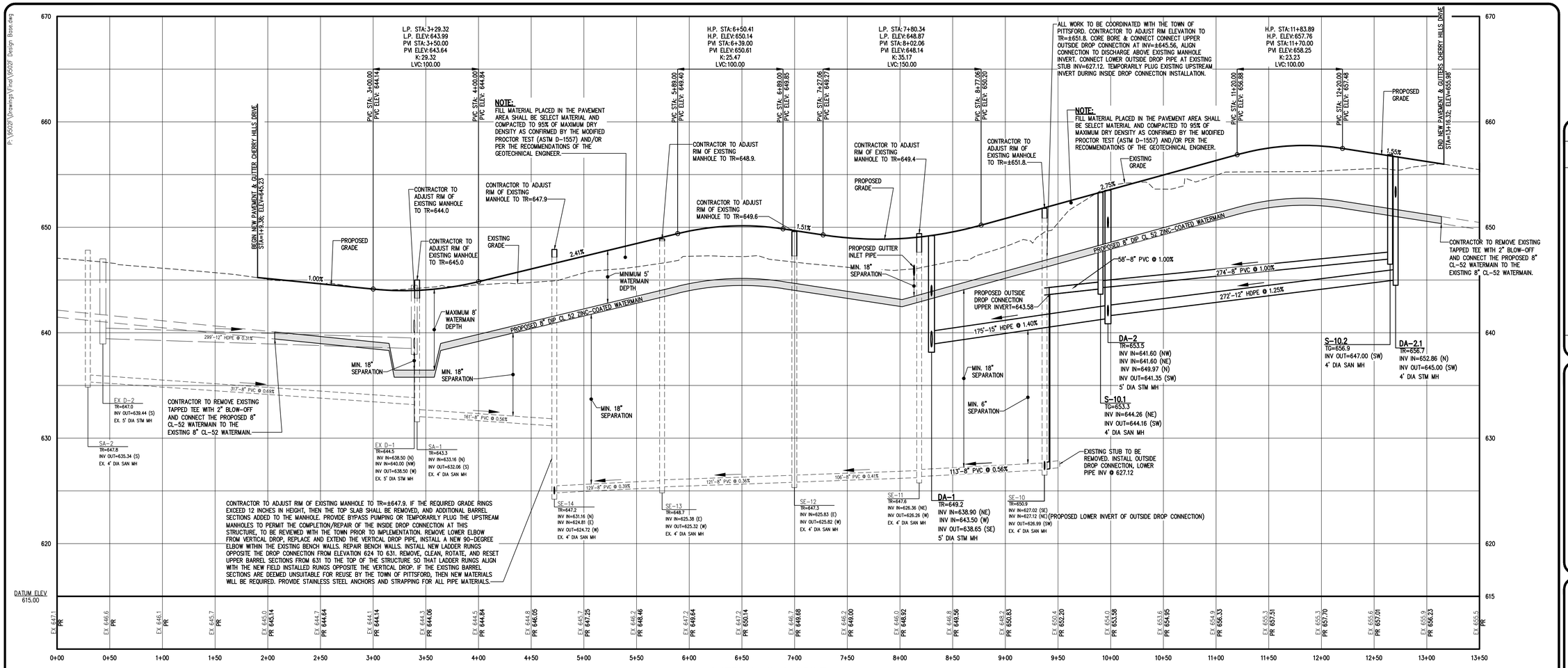

CHERRY HILLS DRIVE

SCALE: HOR: 1"=50'
VERT: 1"=5'

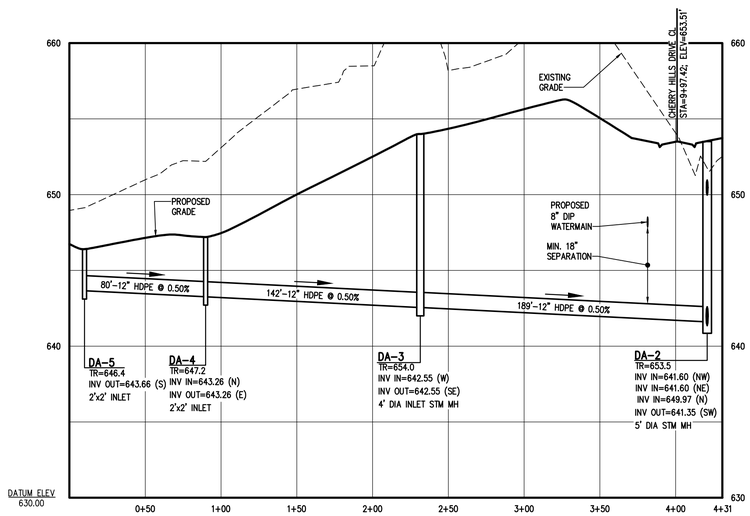

DA-5 TO DA-2

SCALE: HOR: 1"=50'
VERT: 1"=5'

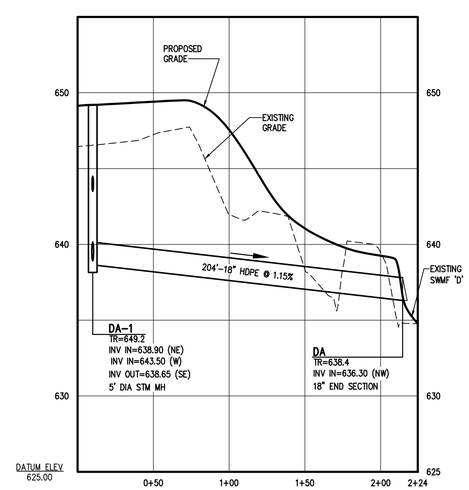

DA-1 TO DA

SCALE: HOR: 1"=50'
VERT: 1"=5'

COPYRIGHT © 2024
BME Associates

NOT APPROVED

This plan has not received final approval of all reviewing agencies. This plan is subject to revisions until all approvals are obtained and should not be used for construction purposes.

APPROVALS

BY: _____ DATE: _____
TOWN ENGINEER

BY: _____ DATE: _____
COMMISSIONER OF PUBLIC WORKS

BY: _____ DATE: _____
CHAIRMAN OF THE PLANNING BOARD

Drawing Alteration
The following is an excerpt from the New York State Education Law Article 145 Section 7209 and applies to this drawing:
"It is a violation of this law for any person, unless he is acting under the direction of a licensed professional engineer or land surveyor to alter any item in any way. If an item bearing the seal of an engineer or land surveyor is altered, the altering engineer or land surveyor shall affix to the item his seal and the notation "altered by" followed by his signature and the date of such alteration, and a specific description of the alteration."

7			
6			
5			
4			
3	REVISED PER TOWN & AGENCY COMMENTS & GRADING	9/19/25	AND
2	REVISED PER TOWN & AGENCY COMMENTS	8/2/24	AND
1	REVISIONS	DATE	BY

BME ASSOCIATES
ENGINEERS • SURVEYORS • LANDSCAPE ARCHITECTS
10 LIFT BRIDGE LANE EAST
FAIRPORT, NEW YORK 14450
WWW.BMEPC.COM
585-377-7360

STATE OF NEW YORK
PETER C. VARS
080610
LICENSED PROFESSIONAL ENGINEER

PROJECT: COVENTRY RIDGE SUBDIVISION
SECTION 3
LOCATION: TOWN OF PITTSFORD, MONROE COUNTY, NEW YORK STATE
CLIENT: CLOVER STREET DEVELOPMENT CORPORATION
30 GROVE STREET
PITTSFORD, NY 14534
DRAWING TITLE: FINAL PROFILE SHEET

PROJECT MANAGER	
P. VARS	
PROJECT ENGINEER	
F. SHELLEY	
DRAWN BY	
A. D'ANGELO	
SCALE	DATE ISSUED
AS SHOWN	APRIL 3, 2024
PROJECT NO.	
9502F	
DRAWING NO.	
07	

PHELPS & GORHAM PURCHASE, TOWNSHIP 12, RANGE 5, TOWN LOT 46, TAX MAP NUMBER 177.03-5-47

P:\9502F\Drawings\Final\9502F Design Base.dwg

UTILITY NOTES:

1. THE SETBACK LINES AND NOTES RELATING TO SETBACK SHOWN ARE INTENDED TO SHOW APPLICABLE ZONING REQUIREMENTS AND APPROVALS UNDER SECTION 278 OF TOWN LAW OF THE TOWN OF PITTSFORD AS OF THE DATE OF THIS MAP AND ARE NOT INTENDED TO IMPOSE ANY ADDITIONAL RESTRICTIONS OTHER THAN SAID ZONING REQUIREMENTS.
2. BUILDINGS SHOWN ON THIS PLAN ARE GRAPHICAL REPRESENTATIONS ONLY.
3. ALL IMPROVEMENTS SHALL BE IN ACCORDANCE WITH THE MOST RECENT STANDARDS AND SPECIFICATIONS OF THE TOWN OF PITTSFORD, THE APPROPRIATE AGENCIES (IE, MONROE COUNTY WATER AUTHORITY, AND THE MONROE COUNTY HEALTH DEPARTMENT) UNLESS OTHERWISE NOTED.
4. THE CONTRACTOR SHALL LOCATE, MARK, SAFEGUARD, AND PRESERVE ALL SURVEY CONTROL MONUMENTS AND RIGHT-OF-WAY MONUMENTS IN THE AREAS OF CONSTRUCTION. FOR DESCRIPTIVE AND SURVEY DATA ON THE CONTROL MONUMENTS, CALL THE MONROE COUNTY GEODETIC SURVEY OFFICE.
5. THE DEVELOPER'S AND CONTRACTOR'S ATTENTION IS DIRECTED TO LOCAL LAW NO. 6 OF 1971 REGARDING LIABILITY INCURRED THROUGH DISTURBANCES OR DESTRUCTION OF GEODETIC SURVEY MONUMENTS.
6. EXISTING UNDERGROUND UTILITIES SHOWN HEREIN WERE PLOTTED FROM FIELD LOCATIONS AND/OR AVAILABLE UTILITY COMPANY RECORD PLANS. EXISTING UTILITIES WHETHER FUNCTIONAL OR ABANDONED WITHIN THE PROJECT AREA MAY NOT BE SHOWN ON THE DRAWINGS. THE CONTRACTOR SHALL CALL THE UFPO HOTLINE AT 1(800)962-7962 OR 811 FOR STAKE-OUT OF EXISTING UTILITIES.
7. THE CONTRACTOR SHALL DETERMINE EXACT LOCATION AND ELEVATION OF UNDERGROUND UTILITIES BEFORE COMMENCING CONSTRUCTION. CONTRACTOR SHALL MAKE EXPLORATION EXCAVATIONS TO LOCATE EXISTING UNDERGROUND FACILITIES SUFFICIENTLY AHEAD OF CONSTRUCTION TO PERMIT REVISIONS AS REQUIRED TO MEET EXISTING CONDITIONS.
8. THE CONTRACTOR MUST NOTIFY THE TOWN OF PITTSFORD SEWER DEPARTMENT 48 HOURS IN ADVANCE OF THE SANITARY AND STORM SEWER CONNECTIONS TO ALLOW TOWN INSPECTION OF THE CONNECTIONS.

WATERMAIN:

9. WATERMAINS AND APPURTENANCES TO BE CONSTRUCTED TO THE MOST RECENT STANDARDS AND SPECIFICATIONS OF THE MONROE COUNTY WATER AUTHORITY. (SEE MCWA PUBLIC WATER SYSTEM NOTES).
10. FOR WATERMAIN CONSTRUCTION, ALL MECHANICAL JOINT FITTINGS, TEES, BENDS, PLUGS, ETC. SHALL BE BACKED WITH 3,000 PSI CONCRETE THRUST BLOCKS
11. ALL WATER MAIN FITTINGS NOT RECEIVING 24-HOUR CHLORINE DISINFECTION CONTACT TIME MUST BE SWAB DISINFECTED 30 MINUTES PRIOR TO INSTALLATION.
12. THE WATER MAIN SHALL NOT BE PLACED INTO SERVICE UNTIL SO AUTHORIZED BY THE MONROE COUNTY DEPARTMENT OF HEALTH.
13. THE HEREIN HYDRANT FLOW TEST RESULTS REPRESENT AN INSTANTANEOUS CONDITION WITHIN THE WATER AUTHORITY'S WATER DISTRIBUTION SYSTEM. ALL WATER SYSTEM DESIGNS SHOULD BE BASED ON WORST CASE CONDITIONS.

FLOW TEST WAS PERFORMED BY THE MONROE COUNTRY WATER AUTHORITY:

LOCATION:	COVENTRY RIDGE
ELEVATION:	647
DATE:	1/12/23
MAIN SIZE:	8" DIP

STATIC PRESSURE: 79 PSI
RESIDUAL PRESSURE: 59 PSI
OBSERVED FLOW: 1,229 GPM
FLOW @ 20 PSI: 2,204 GPM

THE PRESSURE AND FLOW DATA PROVIDED HEREIN REPRESENTS A COMPUTER SIMULATED AVERAGE ESTIMATED VALUE AT THIS LOCATION IN THE DISTRIBUTION SYSTEM ON THIS DATE AND TIME. THESE VALUES CAN VARY GREATLY DEPENDING ON DEMANDS, OPERATIONAL PARAMETERS, SYSTEM CONFIGURATIONS, SUBSEQUENT MODIFICATIONS, AND OTHER RELATED CRITERIA. PLEASE CONTACT TONY PIASICK, P.E. AT 585-442-2001 EXT. 273 WITH ANY QUESTIONS OR CONCERNS.

SANITARY SEWER:

19. ALL SANITARY SEWERS ARE IN COMPLIANCE WITH THE SPECIFICATIONS AND SEWER POLICY OF THE TOWN OF PITTSFORD.
20. SANITARY SEWERS, HOUSE LATERALS AND APPURTENANCES SHALL BE CONSTRUCTED ACCORDING TO THE SPECIFICATIONS OF THE TOWN OF PITTSFORD.
21. SANITARY SEWER PIPE SHALL BE 8" PVC SDR-35 OR AS NOTED ON THE PLAN.
22. FLOOR DRAINS TO BE CONNECTED TO THE SANITARY SEWER. FLOOR DRAINS DO NOT INCLUDE FOUNDATION OR FOOTER DRAINS INSTALLED TO INTERCEPT UNCONTAMINATED GROUNDWATER. ALL DISCHARGES TO THE SANITARY SEWER MUST COMPLY WITH THE EFFLUENT LIMITS OF THE LOCAL AND/OR THE MONROE COUNTY SEWER USE LAW.
23. INFILTRATION AND EXFILTRATION SHALL BE LIMITED TO 100 GALLONS PER MILE PER INCH DIAMETER OF PIPE PER 24 HOURS OR SANITARY SEWERS. IF AN AIR TEST IS USED, THE TEST AS A MINIMUM SHALL CONFORM TO THE PROCEDURE DESCRIBED IN ASTM-C-828-86, ENTITLED "STANDARD PRACTICE FOR LOW PRESSURE AIR TEST OF VITRIFIED CLAY PIPE LINES." SANITARY MANHOLES SHALL BE TESTED FOR EXFILTRATION.

    WATER TESTING - EACH MANHOLE SHALL BE FILLED WITH A MAXIMUM OF 10 FEET OF WATER, SUBJECTED TO A 24 HOUR TEST AND SHOW A LOSS OF WATER NOT TO EXCEED 15 GALLONS/24 HOURS FOR A 4 FOOT IDMH. INFILTRATION TESTS SHALL ADHERE TO THE SAME LIMITS.

    VACUUM TESTING - EACH MANHOLE SHALL BE SUBJECTED TO A VACUUM OF 10 INCHES OF HG FOR ONE MINUTE WITH AN ALLOWABLE LOSS OF 1 INCH OF HG.
24. THE FOLLOWING TESTS SHALL BE PERFORMED ON PVC SANITARY SEWER PIPE:

    A) DEFLECTION TESTS SHALL BE PERFORMED ON ALL FLEXIBLE PIPE. THE TEST SHALL BE CONDUCTED AFTER THE FINAL BACK FILL HAS BEEN IN PLACE AT LEAST 30 DAYS.

    B) NO PIPE SHALL EXCEED A 5% DEFLECTION.

    C) IF THE DEFLECTION TEST IS TO BE RUN USING A RIGID BALL OR MANDREL, IT SHALL HAVE A DIAMETER EQUAL TO 95% OF THE INSIDE DIAMETER OF THE PIPE. THE TEST SHALL BE PERFORMED WITHOUT MECHANICAL PULLING DEVICES.
25. NEW SEWERS ARE TO BE PLUGGED WHEN CONNECTED TO EXISTING MANHOLES UNTIL THE NEW SEWERS ARE FLUSHED, TESTED, AND READY FOR SERVICE.

STORM SEWER:

26. STORM SEWERS, HOUSE LATERALS AND APPURTENANCES SHALL BE CONSTRUCTED ACCORDING TO THE SPECIFICATIONS OF THE TOWN OF PITTSFORD.
27. STORM SEWER PIPE SHALL BE HDPE OR AS NOTED ON THE PLAN
28. CHECK VALVES TO BE PROVIDED ON SUMP PUMPS.
29. ON LOTS 89, 92-95, & 99-108 FOUNDATION AND ROOFS TO CONNECT TO STORM SEWERS. ON LOTS 96-98 FOUNDATION AND ROOFS TO DRAIN TO REAR YARD DISCONNECTS.
30. METAL TOWN OF PITTSFORD CATCH BASIN MARKERS TO BE INSTALLED ON CATCH BASINS UPON INSTALLATION.

LATERALS AND SERVICES:

31. ALL LATERALS OR SERVICES SHALL BE AS NOTED BELOW UNLESS OTHERWISE NOTED ON THE PLANS:

WATER -	1" INCH TYPE K COPPER FROM THE WATERMAIN TO THE CURB BOX
	1" INCH PE #4710 FROM THE CURB BOX TO THE METER (UNLESS NOTED OTHERWISE)
SANITARY -	4" PVC SDR-21 INSTALLED AT 2% MIN SLOPE.
STORM -	6" PVC SDR-35 INSTALLED AT 1% MIN SLOPE.

    EXTEND LATERALS TO 10 FEET BEYOND THE RIGHT-OF-WAY, OR 10 FEET BEYOND THE EASEMENT LINES, WHICHEVER IS GREATER.
32. NO CURB VALVE BOXES (WATER LATERAL) ARE ALLOWED IN DRIVEWAYS. THE SERVICE OR DRIVEWAY WILL BE RELOCATED IF THIS CONFLICT ARISES.
33. ANY LOTS WITH A FRONT SETBACK GREATER THAN 500' FROM THE PUBLIC RIGHT OF WAY WILL BE PROVIDED WITH A METER PIT AND A METER AT THE RIGHT-OF-WAY.
34. ALL HOMES WITH WATER PRESSURE GREATER THAN 70 PSI AT THE METER WILL REQUIRE A PRESSURE REDUCING VALVE INSTALLED AFTER THE METER.
35. SANITARY LATERAL WITNESS STAKES SHALL BE 2"X4" HARDWOOD, EXTENDED 2-3' ABOVE GRADE AND PAINTED GREEN.
36. ANY LAUNDRY WASTEWATER SHALL BE DIRECTED TO THE SANITARY SEWER.
37. CLEANOUTS FOR STORM LATERALS SHALL BE INSTALLED AT ALL HORIZONTAL BENDS AND AT 85' (OR PER PLAN) INTERVALS ALONG THE LATERAL. CLEANOUTS FOR SANITARY LATERALS SHALL BE INSTALLED AT THE RIGHT-OF-WAY OR EASEMENT LINE, AT ALL BENDS 45° OR GREATER, AND AT 90' FOOT INTERVALS THEREAFTER.

COPYRIGHT © 2024
BME Associates

MONROE COUNTY DEPARTMENT OF HEALTH STANDARD WATER MAIN EXTENSION NOTES:

1. THE WATER MAIN PIPELINE SHALL BE DISINFECTED EQUAL TO AWWA STANDARD FOR DISINFECTING WATER MAINS DESIGNATION C651 (LATEST REVISION). FOLLOWING DISINFECTION, THE WATER MAIN PIPELINE SHALL BE FLUSHED UNTIL THE CHLORINE CONCENTRATION IN THE WATER LEAVING THE MAIN IS NO HIGHER THAN THAT GENERALLY PREVAILING IN THE SYSTEM.

    ALL WATER MAIN PIPE FITTINGS NOT RECEIVING 24-HOUR CHLORINE DISINFECTION CONTACT TIME MUST BE SWAB-DISINFECTED 30 MINUTES PRIOR TO INSTALLATION.

    THE SAMPLING POINT(S) MUST BE DECONTAMINATED BY FLAMING.

    FIRE HYDRANTS ARE NOT ACCEPTABLE SAMPLING POINTS.

    THE MONROE COUNTY DEPARTMENT OF PUBLIC HEALTH MUST RECEIVE AT LEAST 48-HOUR ADVANCE NOTIFICATION REQUESTING SAMPLING SERVICES. SAMPLING WILL NOT BE PERFORMED PRIOR TO RECEIPT FROM A NEW YORK STATE LICENSED OR REGISTERED DESIGN PROFESSIONAL (ENGINEER, ARCHITECT OR LAND SURVEYOR WITH A SPECIAL EXEMPTION UNDER SECTION 7208(N) OF THE EDUCATION LAW) CERTIFYING THAT THE WATER SUPPLY IMPROVEMENTS, TESTING AND DISINFECTION PROCEDURES WERE COMPLETED IN ACCORDANCE WITH THE APPROVED PLANS, REPORTS, SPECIFICATIONS AND ANY APPROVED AMENDMENTS. THE DEPARTMENT WILL COLLECT SAMPLES FOR FREE CHLORINE RESIDUAL, TOTAL COLIFORM, ESCHERICHIA COLI (E. COLI) AND TURBIDITY.

    THE WATER MAIN PIPE AND APPURTENANCES SHALL NOT BE PLACED INTO SERVICE UNTIL SO AUTHORIZED BY THE MONROE COUNTY DEPARTMENT OF PUBLIC HEALTH.
2. MINIMUM VERTICAL SEPARATION BETWEEN WATER MAIN PIPELINES AND SEWER PIPELINES SHALL BE 18 INCHES MEASURED FROM THE OUTSIDE OF THE PIPES AT THE POINT OF CROSSING. ONE FULL STANDARD LAYING LENGTH OF WATER MAIN PIPE SHALL BE CENTERED UNDER OR OVER THE SEWER SO THAT BOTH JOINTS WILL BE AS FAR FROM THE SEWER AS POSSIBLE. IN ADDITION, WHEN THE WATER MAIN PIPELINE PASSES UNDER A SEWER, ADEQUATE STRUCTURAL SUPPORT (COMPACTED SELECTED FILL) SHALL BE PROVIDED FOR THE SEWER TO PREVENT EXCESSIVE DEFLECTION OF JOINTS AND SETTLING OF THE SEWER ON THE WATER MAIN. MINIMUM HORIZONTAL SEPARATION BETWEEN PARALLEL WATER MAIN PIPES AND SEWER PIPES (INCLUDING MANHOLES AND VAULTS) SHALL BE 10 FEET MEASURED FROM THE OUTSIDE OF THE PIPES, MANHOLES OR VAULTS.
3. WHEN INSTALLING FIRE HYDRANTS, SHOULD GROUND WATER BE ENCOUNTERED WITHIN SEVEN (7) FEET OF THE FINISHED GRADE, FIRE HYDRANT WEEP HOLES (DRAINS) SHALL BE PLUGGED.
4. THE WATER MAIN PIPELINE AND APPURTENANCES SHALL BE PRESSURE/LEAKAGE TESTED IN ACCORDANCE WITH THE MINIMUM REQUIREMENTS OF THE AWWA STANDARD C600, C602, C604, OR C605 (MOST RECENT VERSION AS APPLICABLE) OR IN ACCORDANCE WITH MORE STRINGENT REQUIREMENTS IMPOSED BY THE SUPPLIER OF WATER.

MONROE COUNTY DEPARTMENT OF HEALTH STANDARD SANITARY SEWER EXTENSION NOTES:

1. MAXIMUM ALLOWABLE INFILTRATION OR EXFILTRATION SHALL NOT EXCEED 100 GALLONS PER INCH DIAMETER PER MILE OF PIPE PER DAY FOR THE SANITARY SEWER. IF AN AIR TEST IS USED, THE TEST AS A MINIMUM SHALL CONFORM TO THE PROCEDURE DESCRIBED IN ASTM DESIGNATION C828-86 ENTITLED PRACTICE FOR LOW-PRESSURE AIR TEST OF VITRIFIED CLAY PIPE LINES. SANITARY MANHOLES SHALL BE VISUALLY INSPECTED AND TESTED FOR LEAKAGE BY EXFILTRATION OR VACUUM. VACUUM TESTING OF MANHOLES SHALL COMPLY WITH THE METHOD OUTLINED IN THE NEW YORK STATE DEPARTMENT OF ENVIRONMENTAL CONSERVATION - TECHNICAL INFORMATION PAMPHLET (TIP) NO. 15 (LATEST REVISION).
2. FLOOR DRAINS, IF CONSTRUCTED IN THE PROJECT, MUST BE CONNECTED TO THE SANITARY SEWER. NOTE: FLOOR DRAINS DO NOT INCLUDE FOUNDATION OR FOOTER DRAINS INSTALLED TO INTERCEPT UNCONTAMINATED GROUND WATER. ALL DISCHARGES FROM THE FLOOR DRAINS TO THE SANITARY SEWER MUST COMPLY WITH THE EFFLUENT LIMITS OF THE LOCAL AND/OR THE MONROE COUNTY SEWER USE LAW.
3. DEFLECTION TESTS SHALL BE PERFORMED ON ALL FLEXIBLE PIPE. THE TEST SHALL BE CONDUCTED AFTER THE FINAL BACKFILL HAS BEEN IN PLACE AT LEAST 30 DAYS. NO PIPE SHALL EXCEED A DEFLECTION OF 5%. IF THE DEFLECTION TEST IS TO BE RUN USING A RIGID BALL OR MANDREL, IT SHALL HAVE A DIAMETER EQUAL TO 95% OF THE INSIDE DIAMETER OF THE PIPE. THE TEST SHALL BE PERFORMED WITHOUT MECHANICAL PULLING DEVICES.
4. MINIMUM VERTICAL SEPARATION BETWEEN WATER MAINS AND SEWER LINES SHALL BE 18 INCHES MEASURED FROM THE OUTSIDE OF THE PIPES AT THE POINT OF CROSSING. ONE FULL STANDARD LAYING LENGTH OF WATER MAIN PIPE SHALL BE CENTERED UNDER OR OVER THE SEWER SO THAT BOTH JOINTS WILL BE AS FAR FROM THE SEWER AS POSSIBLE. IN ADDITION, WHEN THE WATER MAIN PIPELINE PASSES UNDER A SEWER, ADEQUATE STRUCTURAL SUPPORT (COMPACTED SELECTED FILL) SHALL BE PROVIDED FOR THE SEWER TO PREVENT EXCESSIVE DEFLECTION OF JOINTS AND SETTLING OF THE SEWER ON THE WATER MAIN. MINIMUM HORIZONTAL SEPARATION BETWEEN PARALLEL WATER MAINS PIPES AND SEWER PIPES (INCLUDING MANHOLES AND VAULTS) SHALL BE 10 FEET MEASURED FROM THE OUTSIDE OF THE PIPES, MANHOLES OR VAULTS.

PUBLIC WATER SYSTEM NOTES

All materials, installation and testing procedures shall be in compliance with current AWWA standards and in accordance with the regulations and specifications of the Authority. Should a conflict exist the authority's specifications shall govern.

Material:

- Water main(s) shall be __8"__-inch class 52, cement mortar lined, zinc-coated, ductile iron pipe.
- Water service(s) shall be __1"__-inch Type K Copper from the water main to the curb box and __1"__-inch (Type K soft Copper or PE #4710) from the curb box to the meter.
- Water meter(s) to be located on the interior of exterior walls(s) immediately upon service entrance into the building footprint, heated enclosure, or in a meter tile when conditions warrant. A bypass assembly is not required around 5/8-inch through 1-inch meters. 1 ½-inch and 2-inch meters may require a bypass assembly depending upon the application. 3-inch and larger meters require a bypass assembly.
- All gate valves shall have stainless steel body and bonnet bolts.

Tests:

- **Soil Test.** The contractor shall provide a soil test evaluation to determine the need for V-BIO polyethylene encasement per ANSI/AWWA C105/AZ1.5-82 prior to water main installation. Soil testing shall be conducted by an approved soil testing laboratory in accordance with Water Authority standards.
- **Pressure Test.** Water mains to be pressure tested in accordance with the latest Water Authority specifications. **A Water Authority representative must witness this test.**
- **Health Sample.** The water main shall be disinfected equal to AWWA Standard Specifications, designation C-651, by using the continuous feed method. After flushing and disinfecting the water main, water samples shall be collected from the main by the Health Department with jurisdiction of the area. Fire hydrants are not acceptable sampling points. Approval and notification by the Health Department must be received before the main is placed in service.

Installation:

- Water mains and all water service lines shall have a minimum of five feet of cover from finished grade in non-pavement areas and a minimum of six feet of cover from finished grade in paved areas.
- Minimum **vertical** separation between water main and sewer mains shall be 18" measured from the outside of the pipes at the point of crossing. Minimum **horizontal** separation between water mains and sewer mains shall be ten feet measured from the outside of the pipes. One full length of water main shall be centered under or over the sewer so that both joints will be as far from the sewer as possible. Where a water main crosses under a sewer, adequate structural support (compacted selected fill) shall be provided for the sewers to prevent excessive deflection of joints and settling on and breaking the water mains.
- Fire hydrant weep holes (drains) shall be plugged when ground water is encountered within seven feet of the finished grade.
- All mechanical joint fittings (tees, bends, plugs, etc.) shall be backed with 2500 psi concrete thrust blocks of appropriate size to provide thrust restraint.

SEQUENCE OF CONSTRUCTION STEPS:

TOTAL DISTURBED ACREAGE = ±11.8 ACRES (SECTION 3)

STEP 1: (SITE PREPARATION)

- INSTALL AND MAINTAIN STABILIZED CONSTRUCTION ENTRANCE(S) AND CONSTRUCTION STAGING AREA (SEE DETAIL).
- CLEAR AND GRUB AS REQUIRED FOR SILT FENCE INSTALLATION.
- INSTALL AND MAINTAIN PERIMETER SILT FENCE, COMPLETE CLEARING AND GRUBBING OPERATIONS AS NECESSARY OR PROVIDE BRUSH HOGGING OF LANDS TO MAINTAIN GROUND COVER.
- EXISTING TOPSOIL PILE TO REMAIN AND BE USED AS A TEMPORARY TOPSOIL STORAGE AREA FOR FINE GRADING OF INDIVIDUAL LOTS. IF BULK TOPSOIL RELOCATION IS REQUIRED CONTRACTOR SHALL PROVIDE ALL NECESSARY TOPSOIL PILE STABILIZATION IN ALTERNATE LOCATIONS.

STEP 2: (CONSTRUCTION ACTIVITY)

- STRIP AND STOCKPILE TOPSOIL; TOPSOIL AND NON-STRUCTURAL MATERIAL TO BE STRIPPED FROM ALL PROPOSED PAVEMENT AND BUILDING AREAS AS NECESSARY FOR MASS GRADING OPERATIONS AND STOCKPILED IN DESIGNATED AREA. INSTALL SILT FENCE AROUND PERIMETER OF NEW TOPSOIL PILES AND SEED WITH TEMPORARY SEEDING MIX. MULCH IS REQUIRED BETWEEN NOVEMBER 15TH AND APRIL 1ST.
- COMMENCE MASS GRADING OPERATIONS, COMPLETE REQUIRED CUTS AND FILLS. UPON COMPLETION OF THE MASS GRADING OPERATIONS, INSTALL ADDITIONAL EROSION CONTROL MEASURES INCLUDING STONE CHECK DAMS, INTERCEPTOR SWALES, AND TEMPORARY SEDIMENT TRAPS. SWALES TO BE STABILIZED WITHIN 2 DAYS OF COMPLETION AND SEDIMENT TRAPS TO BE STABILIZED IMMEDIATELY. MEASURES ARE TO BE MAINTAINED BY THE CONTRACTOR UNTIL GROUND COVER HAS BEEN ESTABLISHED.
- CONTRACTOR MAY INSTALL UTILITIES DURING GRADING OPERATIONS. IT IS THE CONTRACTOR'S RESPONSIBILITY TO STABILIZE THE SITE AND VERIFY GRADING ELEVATIONS PRIOR TO UTILITY CONSTRUCTION. ADDITIONAL EROSION CONTROL MEASURES, INCLUDING STONE CHECK DAMS, INTERCEPTOR SWALES AND TEMPORARY SEDIMENT TRAPS SHALL BE PROVIDED AS SHOWN IN THE PLANS, OR AS DIRECTED.
- COMPLETE EARTHWORK, INCLUDING FINE GRADING OF SLOPES. SLOPES TO BE REPLACED WITH 6" OF TOPSOIL, MULCHED AND SEEDED WITHIN 2 DAYS OF COMPLETION. SILT FENCE TO BE INSTALLED AT TOE OF SLOPE (IF APPLICABLE).
- COMPLETE INSTALLATION OF UNDERGROUND UTILITIES AND ROAD BOX. RESTORE AND RE-SEED RIGHT-OF-WAY AREAS AS NEEDED. INSTALL PAVEMENT DIVERSION ONCE THE BINDER ASPHALT IS INSTALLED.
- INSTALL CONCRETE TRUCK WASHOUT PRIOR TO CONCRETE POURING ACTIVITIES (SEE DETAIL).
- INSTALL ROAD BASE, GUTTERS AND PAVEMENT WITH EROSION CONTROL MEASURES AS NECESSARY TO MINIMIZE SILT DISTRIBUTION ON EXISTING AND CONSTRUCTED ROADWAYS.

STEP 3: (STABILIZATION & MONITORING)

- SEED AND MULCH ALL DISTURBED AREAS AS REQUIRED BY GP-0-25-001. SEED WITH A SEED MIX AS INDICATED IN CONSTRUCTION EROSION CONTROL NOTES, AND MULCH.
- SEED ALL SLOPES 3:1 OR STEEPER WITH STEEP SLOPE SEEDING MIX AND STABILIZE WITH EROSION CONTROL BLANKET - ECS-1B (EASTCOAST) OR AN APPROVED EQUIVALENT.
- FROM NOVEMBER 15TH TO APRIL 1ST, IF STRAW MULCH ALONE IS USED FOR TEMPORARY STABILIZATION, IT SHALL BE APPLIED AT DOUBLE THE STANDARD RATE OF 2 TONS PER ACRE, MAKING THE APPLICATION RATE 4 TONS PER ACRE.
- MAINTAIN PERIMETER SILT FENCE AND INLET PROTECTION UNTIL THE ADJACENT SOILS HAVE ACHIEVED 80% STABILIZATION.
- SEE CONSTRUCTION EROSION CONTROL NOTES FOR REQUIRED SEED MIXES AND TEMPORARY/WINTER STABILIZATION METHODOLOGY.
- DUST SHALL BE CONTROLLED DURING CONSTRUCTION BY THE CONTRACTOR TO MINIMIZE EFFECT ON THE ADJACENT PROPERTIES. THE CONTRACTOR SHALL IMPLEMENT DUST CONTROL MEASURES AS NEEDED AND/OR AS DIRECTED BY THE TOWN ENGINEER OR OWNER.
- THE CONTRACTOR SHALL BE RESPONSIBLE FOR KEEPING THE EXISTING ROADWAYS, PAVED AREAS, AND CHANNELS FREE OF MUD, DIRT, AND DEBRIS. THE CONTRACTOR WILL CLEAN THESE AREAS AS NECESSARY OR AS REQUIRED BY THE OWNER OR TOWN OF PITTSFORD.
- CONTRACTOR TO REMOVE ACCUMULATED SEDIMENT FORM EXISTING STORMWATER MANAGEMENT POND UPON STABILIZATION OF MASS GRADE ACCESS.

CONSTRUCTION EROSION CONTROL NOTES:

1. THE STORMWATER POLLUTION PREVENTION PLAN (SWPPP) CONSISTS OF THE STORMWATER MANAGEMENT REPORT, THE PROJECT PLANS, INCLUDING THE GRADING, CONSTRUCTION EROSION CONTROL PLAN AND DETAIL SHEET, AND THE TOWN OF PITTSFORD DESIGN AND CONSTRUCTION SPECIFICATIONS REGARDING STORMWATER CONTROL. THE SWPPP FOR THIS PROJECT IS INTENDED TO CONFORM WITH THE NYSDEC GENERAL PERMIT GP-0-25-001 AND THE REQUIREMENTS OF LOCAL AND NYSDEC AUTHORITIES REGARDING THE CONTROL OF STORMWATER QUANTITY AND QUALITY.
2. THE OWNER IS RESPONSIBLE FOR IMPLEMENTING THE REQUIRED SWPPP. THE OWNER'S CONTRACTOR, SUB-CONTRACTOR AND ALL OTHERS ASSOCIATED WITH THE IMPLEMENTATION OF THE PLAN SHALL BE FAMILIAR WITH THE PLAN AND THE CONDITIONS OF THE NYSDEC GENERAL PERMIT FOR STORMWATER DISCHARGES FROM CONSTRUCTION ACTIVITIES.
3. ANY MODIFICATIONS OR DEVIATIONS FROM THE SWPPP, INCLUDING EROSION CONTROL MEASURES AND STORMWATER MANAGEMENT FACILITIES, SHALL BE DOCUMENTED IN THE INSPECTION REPORT AND CONSIDERED PART OF THE SWPPP FOR THE PROJECT.
4. THE PROJECT DEVELOPMENT IS CURRENTLY COVERED UNDER THE GENERAL PERMIT AS A PORTION OF THE OVERALL COVENTRY RIDGE SUBDIVISION. SITE DEVELOPMENT AS IDENTIFIED IN THE ACKNOWLEDGEMENT OF NOTICE OF INTENT, DATED JANUARY 2024 WITH PERMIT IDENTIFICATION #NYR11M155 FOR SECTIONS 3 & 4. THE PROPOSED SITE DEVELOPMENT IS CONSISTENT WITH THE SCOPE OF DEVELOPMENT IDENTIFIED IN THE ORIGINAL NOTICE OF INTENT (N.O.I.) THE PROJECT RECEIVED APPROVAL FOR CONTINUED COVERAGE UNDER GP-0-25-001 ON 2/18/2025. A COPY OF THE REFERENCED N.O.I. SHALL BE KEPT ONSITE AND HAS BEEN PROVIDED TO THE MUNICIPALITY ALONG WITH THE SECTION 3 & 4 SWPPP ADDENDUM.
5. THE OWNER SHALL BE RESPONSIBLE FOR PROVIDING ON SITE INSPECTIONS BY A LICENSED PROFESSIONAL REGARDING EROSION CONTROL DURING CONSTRUCTION. INSPECTIONS ARE TO BE PROVIDED AT A MINIMUM OF TWICE A WEEK FOR DISTURBANCES OF 5 ACRES AND GREATER AND ONCE A WEEK FOR DISTURBANCES LESS THAN 5 ACRES. AN INSPECTION REPORT LOG AND THE SWPPP ARE TO BE KEPT ON-SITE BY THE OWNER.
6. FOR SITES WHERE SOIL DISTURBANCE ACTIVITIES HAVE BEEN TEMPORARILY SUSPENDED (E.G. WINTER SHUTDOWN) AND TEMPORARY STABILIZATION MEASURES HAVE BEEN APPLIED TO ALL DISTURBED AREAS, THE OWNER/OPERATOR MAY REDUCE THE SELF-INSPECTION FREQUENCY, BUT SHALL MAINTAIN A MINIMUM OF MONTHLY INSPECTIONS. (30 CALENDAR DAYS)
7. THE OWNER'S CONTRACTOR/REPRESENTATIVE SHALL IDENTIFY AT LEAST ONE INDIVIDUAL TO BE TRAINED FROM THEIR COMPANY THAT WILL BE RESPONSIBLE FOR IMPLEMENTATION OF THE SWPPP. THE INDIVIDUAL MUST RECEIVE (4) HOURS OF NYSDEC TRAINING EVERY (3) YEARS. THE OWNER/OPERATOR SHALL ENSURE THAT AT LEAST ONE OF THE TRAINED INDIVIDUALS IS ON SITE ON A DAILY BASIS WHEN SOIL DISTURBANCE ACTIVITIES ARE BEING PERFORMED.
8. FOR DISTURBANCES OF 5 ACRES AND GREATER, IN AREAS WHERE SOIL DISTURBANCE ACTIVITY HAS TEMPORARILY OR PERMANENTLY CEASED, THE APPLICATION OF SOIL STABILIZATION MEASURES MUST BE INITIATED BY THE END OF THE NEXT BUSINESS DAY AND COMPLETED WITHIN 7 DAYS. FROM THE DATE THE CURRENT SOIL DISTURBANCE ACTIVITY CEASED. IF THE SEASON PREVENTS THE ESTABLISHMENT OF TEMPORARY GROUNDCOVER, THE DISTURBED AREAS SHALL BE MULCHED WITH STRAW OR EQUIVALENT MATERIAL. ADDITIONAL TIME FRAMES FOR STABILIZATION ARE SUBJECT TO THE REQUIREMENTS OF A REGULATED TRADITIONAL LAND USE MS4.
9. FOR DISTURBANCES LESS THAN 5 ACRES, IN AREAS WHERE SOIL DISTURBANCE ACTIVITY HAS TEMPORARILY OR PERMANENTLY CEASED, THE APPLICATION OF SOIL STABILIZATION MEASURES MUST BE INITIATED BY THE END OF THE NEXT BUSINESS DAY AND COMPLETED WITHIN 14 DAYS. FROM THE DATE THE CURRENT SOIL DISTURBANCE ACTIVITY CEASED. IF THE SEASON PREVENTS THE ESTABLISHMENT OF TEMPORARY GROUNDCOVER, THE DISTURBED AREAS SHALL BE MULCHED WITH STRAW OR EQUIVALENT MATERIAL. ADDITIONAL TIME FRAMES FOR STABILIZATION ARE SUBJECT TO THE REQUIREMENTS OF A REGULATED TRADITIONAL LAND USE MS4.
10. THE OWNER'S CONTRACTOR SHALL BE RESPONSIBLE FOR THE ESTABLISHMENT, MAINTENANCE, CLEANING, REPAIR AND REPLACEMENT OF EROSION CONTROL MEASURES DURING SITE CONSTRUCTION.
11. ALL DISTURBED AREAS TO BE RESTORED PER TABLE 5.3 SOIL RESTORATION REQUIREMENTS FOUND IN CHAPTER 5: GREEN INFRASTRUCTURE PRACTICES OF THE NYS STORMWATER MANAGEMENT DESIGN MANUAL. PLEASE REVIEW WITH PROJECT MANAGER.
12. ALL DISTURBED AREAS TO BE RECLAIMED WITH A MINIMUM OF 6" TOPSOIL.
13. AREAS OR EMBANKMENTS REQUIRING AN EROSION CONTROL BLANKET SHALL UTILIZE ECS-1B (EASTCOAST) OR AN APPROVED EQUIVALENT.
14. TEMPORARY SEEDING OF DISTURBED AREAS SHALL BE PROVIDED AS FOLLOWS:

    THE SURFACE TWO INCHES OF SOIL SHOULD BE LOOSENED BY DISKING, RAKING, OR BACK-BLADING WITH A BULLDOZER. IMMEDIATELY FERTILIZE WITH 300 LBS PER ACRE (OR 7 LBS. PER 1000 SQ. FT.) OF 10-10-10 FERTILIZER. IMMEDIATELY SEED WITH THE FOLLOWING MIX:

	LBS./ACRE	LBS./1000 SQ. FT.
ANNUAL RYEGRASS	40	1
PERENNIAL RYEGRASS	40	1
OATS	40	1
WHITE CLOVER (+ INNOCULANT)	4	0.1

    SEED SHOULD HAVE A GERMINATION RATE OF AT LEAST 85 PERCENT AND MINIMAL INERT MATERIAL.
15. DISTURBED AREAS SHALL BE STABILIZED USING PERMANENT LAWN SEEDING MIX UPON COMPLETION OF GRADING AND CONSTRUCTION:

	LBS/ACRE	% BY PURITY	% GERM
PERENNIAL RYE GRASS	35	85	85
RED FESCUE	35	97	80
KENTUCKY BLUEGRASS	30	85	80

    SEEDING RATE: 6.0 LBS PER 1,000 SQ FT.
    MULCH: STRAW OR WOOD FIBER MULCH USED WITH HYDROSEEDING METHOD, AT TWO TONS PER ACRE WITH TACKIFIER
    STARTING FERTILIZER: 5-10-10 AT 20 LBS PER 1,000 SQ. FT
16. SLOPES 3:1 OR GREATER SHALL BE SEEDED WITH HEAVY MULCH AND MAY REQUIRE ADDITIONAL STABILIZATION MEASURES. SLOPES SHALL BE FINE GRADED WITH A MINIMUM OF 6" TOPSOIL AND SEEDED WITH FOLLOWING SEED MIX:

    NATIVE STEEP SLOPE MIX WITH ANNUAL RYE GRASS - ERNMX-181

29.0%	Andropogon gerardii	BIG BLUESTEM, 'SOUTHLOW'-MI ECOTYPE
20.0%	Lolium multiflorum	ANNUAL RYEGRASS
15.0%	Sorghastrum nutans	INDIANGRASS
13.4%	Elymus virginicus	VIRGINIA WILDRYE, MADISON-NY ECOTYPE
6.60%	Elymus canadensis	CANADA WILDRYE
4.80%	Panicum virgatum 'Shawnee'	SWITCHGRASS, 'SHAWNEE"
4.00%	Agrostis perennans	AUTUMN BENTGRASS, ALBANY PINE BUSH-NY ECOTYPE
2.80%	Panicum clandestinum	DEERTONGUE, TIOGA
1.00%	Rudbeckia hirta	BLACKEYED SUSAN
0.70%	Coreopsis lanceolata	LANCELEAF COREOPSIS
0.70%	Echinacea purpurea	PURPLE CONEFLOWER
0.70%	Heliopsis helianthoides	OXEYE SUNFLOWER, PA ECOTYPE
0.60%	Chamaecrista fasciculata	PARTRIDGE PEA, PA ECOTYPE
0.20%	Aster pilosus	HEATH ASTER, PA ECOTYPE
0.20%	Monorada fistulosa	WILD BERGAMONT
0.10%	Apocynum cannabinum	INDIANHEMP, PA ECOTYPE
0.10%	Asclepias syriaca	COMMON MILKWEED
0.10%	Soldiago rugosa	WRINKLELEAF GOLDENROD, PA ECOTYPE

    SEEDING RATE: 60 LBS PER ACRE OR 1 LB PER 1000 SF
    INNOCULANT: RATE AS RECOMMENDED BY THE MANUFACTURER (FOR HYDROSEEDING USE FOUR TIMES MANUFACTURER'S RECOMMENDED RATE)
    MULCH: STRAW OR WOOD FIBER MULCH USED WITH A HYDROSEEDING METHOD, AT TWO TONS PER ACRE WITH TACKIFIER.
17. ALL SEEDED AREAS ARE TO BE MONITORED FOR GERMINATION AND EROSION. ERODED AREAS ARE TO BE BACKFILLED, FINE GRADED AND RE-SEEDED. AREAS THAT FAIL TO GERMINATE A MINIMUM OF 80% SHALL BE RE-SEEDED.
18. ANY EXCAVATIONS THAT MUST BE DE-WATERED SHALL BE PUMPED INTO AN APPROVED FILTERING DEVICE BEFORE ENTERING AN ACTIVE DRAINAGE SYSTEM OR DISPERSED TO AN UNDISTURBED AREA.
19. THE HOME BUILDER SHALL BE RESPONSIBLE FOR IMPLEMENTING INDIVIDUAL LOT EROSION CONTROL MEASURES AS SHOWN ON THE PLAN DETAIL FOR INDIVIDUAL HOUSE CONSTRUCTION. THE MEASURES ARE TO REMAIN IN PLACE UNTIL HOUSE CONSTRUCTION IS COMPLETE AND THE LAWN IS ESTABLISHED.
20. THE OWNER SHALL BE RESPONSIBLE FOR REMOVING EXISTING EROSION CONTROL MEASURES THAT ARE LOCATED WITHIN ESTABLISHED AREAS. MATERIALS ARE TO BE DISPOSED OF PROPERLY.
21. UPON COMPLETION OF CONSTRUCTION AND FINAL STABILIZATION THE OWNER MAY FILE A NOTICE OF TERMINATION (NOT) WITH NYSDEC PER THE REQUIREMENTS OF THE GENERAL PERMIT GP-0-25-001.

Table 5.3 Soil Restoration Requirements

Type of Soil Disturbance	Soil Restoration Requirement		Comments/Examples
No soil disturbance	Restoration not permitted		Preservation of Natural Features
Minimal soil disturbance	Restoration not required		Clearing and grubbing
Areas where topsoil is stripped only - no change in grade	HSG A &B apply 6 inches of topsoil	HSG C&D Aerate* and apply 6 inches of topsoil	Protect area from any ongoing construction activities.
Areas of cut or fill	HSG A &B Aerate and apply 6 inches of topsoil	HSG C & D Apply full Soil Restoration **	
Heavy traffic areas on site (especially in a zone 5-25 feet around buildings but not within a 5 foot perimeter around foundation walls)	Apply full Soil Restoration (de-compaction and compost enhancement)		
Areas where Runoff Reduction and/or Infiltration practices are applied	Restoration not required, but may be applied to enhance the reduction specified for appropriate practices.		Keep construction equipment from crossing these areas. To protect newly installed practice from any ongoing construction activities construct a single phase operation fence area
Redevelopment projects	Soil Restoration is required on redevelopment projects in areas where existing impervious area will be converted to pervious area.		

*Aeration includes the use of machines such as tractor-drawn implements with coulters making a narrow slit in the soil, a roller with many spikes making indentations in the soil, or prongs which function like a mini-subsoiler.

** Per "Deep Ripping and De-compaction, DEC 2008".

NOT APPROVED

This plan has not received final approval of all reviewing agencies. This plan is subject to revisions until all approvals are obtained and should not be used for construction purposes.

APPROVALS

BY: ______ DATE: ______
MONROE COUNTY WATER AUTHORITY

BY: ______ DATE: ______
TOWN ENGINEER

BY: ______ DATE: ______
COMMISSIONER OF PUBLIC WORKS

BY: ______ DATE: ______
CHAIRMAN OF THE PLANNING BOARD

BY: ______ DATE: ______
PITTSFORD SEWER DEPARTMENT

PHELPS & GORHAM PURCHASE, TOWNSHIP 12, RANGE 5, TOWN LOT 46, TAX MAP NUMBER 177.03-5-47

Drawing Alteration
The following is an excerpt from the New York State Education Law Article 145 Section 7209 and applies to this drawing:
"It is a violation of this law for any person, unless he is acting under the direction of a licensed professional engineer or land surveyor to alter any item in any way. If an item bearing the seal of an engineer or land surveyor is altered, the altering engineer or land surveyor shall affix to the item his seal and the notation "altered by" followed by his signature and the date of such alteration, and a specific description of the alteration."

	REVISIONS	DATE	BY
7			
6			
5			
4			
3			
2	REVISED PER TOWN & AGENCY COMMENTS & GRADING	9/19/25	AND
1	REVISED PER TOWN & AGENCY COMMENTS	8/2/24	AND

BME | ASSOCIATES
ENGINEERS • SURVEYORS • LANDSCAPE ARCHITECTS
10 LIFT BRIDGE LANE EAST
FAIRPORT, NEW YORK 14450
WWW.BMEPC.COM
585-377-7360

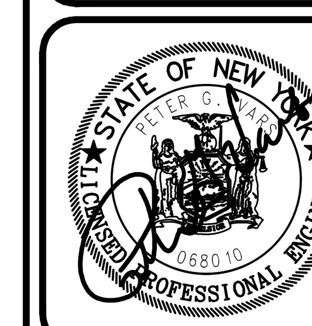

PROJECT: COVENTRY RIDGE SUBDIVISION
SECTION 3
LOCATION: TOWN OF PITTSFORD, MONROE COUNTY, NEW YORK STATE
CLIENT: CLOVER STREET DEVELOPMENT CORPORATION
30 GROVE STREET
PITTSFORD, NY 14534
DRAWING TITLE: FINAL
NOTE SHEET

PROJECT MANAGER	P. VARS
PROJECT ENGINEER	F. SHELLEY
DRAWN BY	A. D'ANGELO
SCALE	N.A.
DATE ISSUED	APRIL 3, 2024
PROJECT NO.	9502F
DRAWING NO.	08

P:\9502F\Drawings\Final\9502F Design Base.dwg

P:\9502F\Drawings\Final\9502F Detail Base.dwg

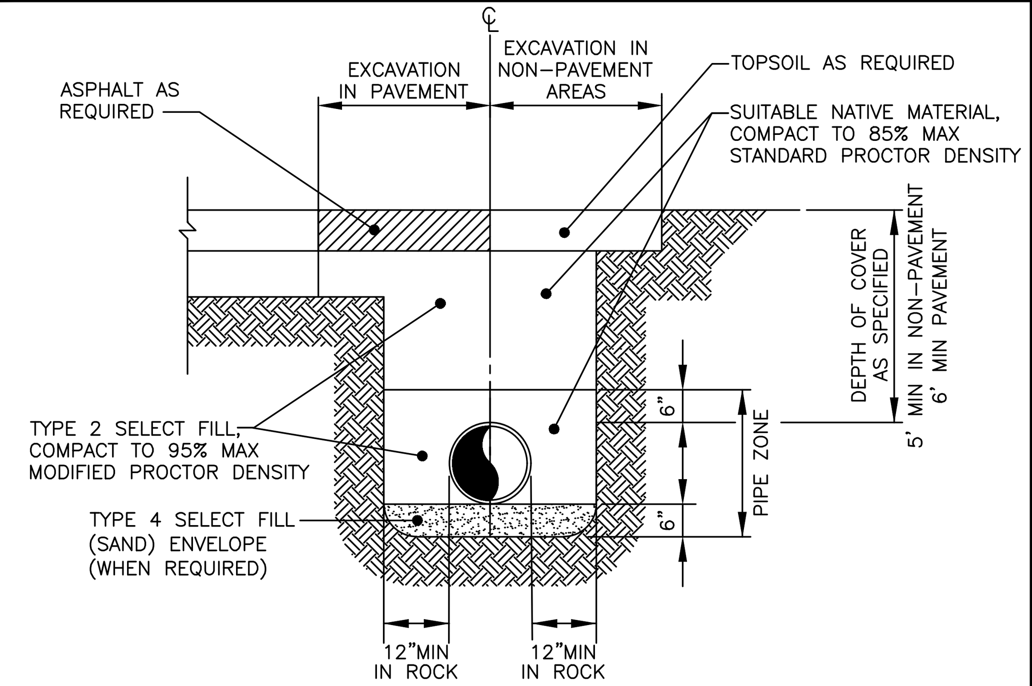

DIP TRENCH

NOT TO SCALE

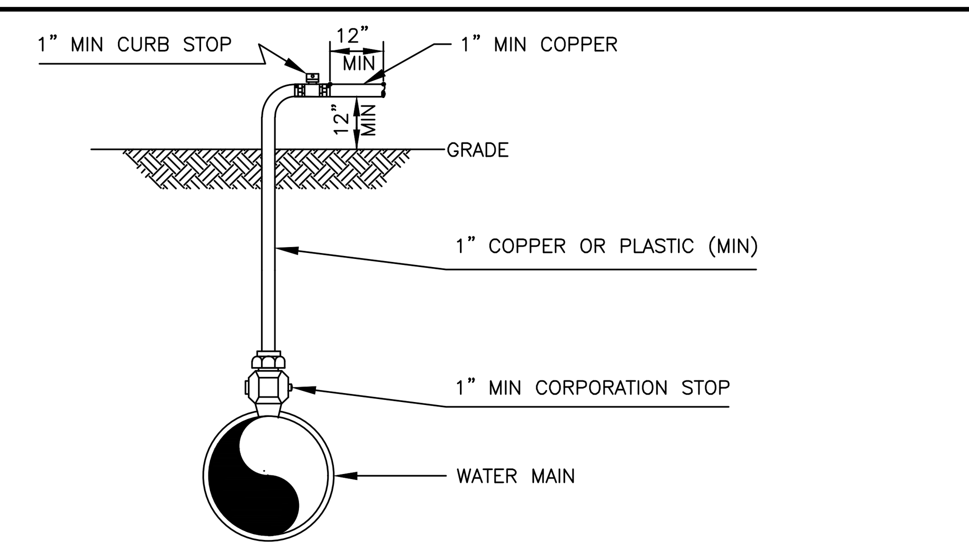

NOTE: IN THE PRESENCE OF A WATER AUTHORITY REPRESENTATIVE REMOVE ALL CORPORATIONS ASSOCIATED WITH TEMPORARY DISINFECTION/SAMPLE TAPS AND REPLACE WITH THREADED BRASS PLUGS.

DISINFECTION/BLOW-OFF/SAMPLING TAP (TEMPORARY)

NOT TO SCALE

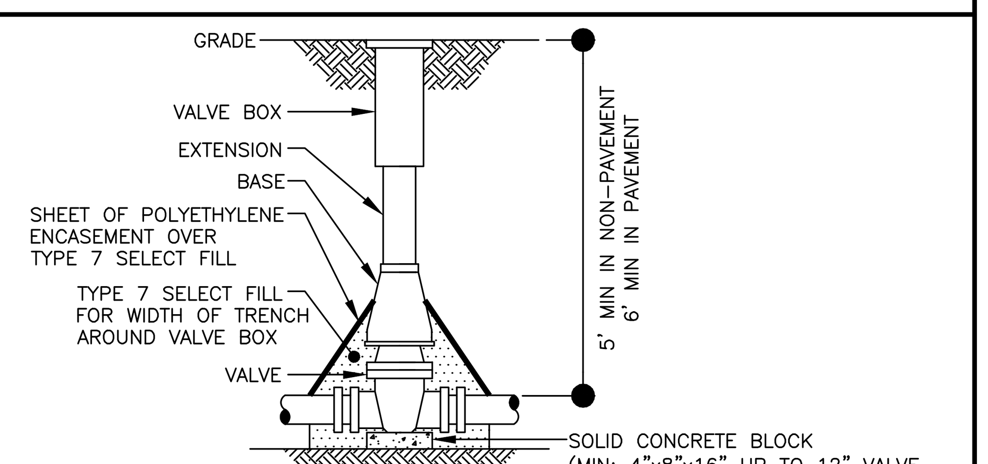

NOTES:

1. CENTER VALVE BOX ON VALVE AND SET ON COMPACTED BACKFILL.
2. VALVE SHALL NOT SUPPORT VALVE BOX.
3. ALL VALVES SHALL BE OPEN LEFT EXCEPT:
   TOWN OF WEBSTER – VALVES 12" AND SMALLER SHALL OPEN RIGHT.
   TOWN OF HENRIETTA – SHALL OPEN RIGHT

VALVE

NOT TO SCALE

CONDITION	SCHEMATIC	REQUIREMENTS
I WATER LINE ABOVE SEWER LINE	WL / MORE THAN 18" / SL	A) WATER LINE AND SEWER LINE PIPE LENGTHS TO BE CENTERED AT CROSSING. EACH LENGTH OF PIPE TO BE 10 FT. MINIMUM. B) BACKFILL WITH COMPACTED CRUSHER RUN STONE.
II WATER LINE ABOVE SEWER LINE	WL / 18" MIN. / SL	A) WATER LINE AND SEWER LINE PIPE LENGTHS TO BE CENTERED AT CROSSING. EACH LENGTH OF PIPE TO BE 10 FT. MINIMUM. B) WHEN BOTH WATER LINE AND SEWER LINE ARE NEW, SLEEVE SEWER LINE WITH STEEL CASING FOR 10 FT. EACH SIDE OF CROSSING. WHEN ONE LINE IS EXISTING, SLEEVE PIPE BEING INSTALLED WITH STEEL CASING FOR 10 FT. EACH SIDE OF CROSSING. C) BACKFILL WITH COMPACTED CRUSHER RUN STONE.
III SEWER LINE ABOVE WATER LINE	SL / 18" MIN. / WL	A) WATER LINE AND SEWER LINE PIPE LENGTHS TO BE CENTERED AT CROSSING. EACH LENGTH OF PIPE TO BE 10 FT. MINIMUM. B) SLEEVE SEWER LINE WITH STEEL CASING FOR 10 FT. EACH SIDE OF CROSSING. C) PROVIDE CRADLE OF CONCRETE OR CRUSHER RUN STONE (SEE TRENCH DETAIL BELOW) FOR WATER LINE AND SEWER LINE FOR 10 FT. EACH SIDE OF CROSSING.

NOTES

(WATER LINE)

(SEWER LINE)

(OUTSIDE DIAMETER OF PIPE)

IN NO CASE SHALL PIPES BE CLOSER THAN 18" APART. DISTANCES ARE MEASURED BETWEEN OUTSIDES OF PIPE.

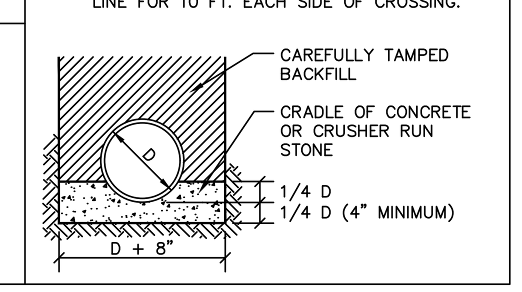

COPYRIGHT © 2024
BME Associates

WATERMAIN/SEWER CROSSING DETAIL

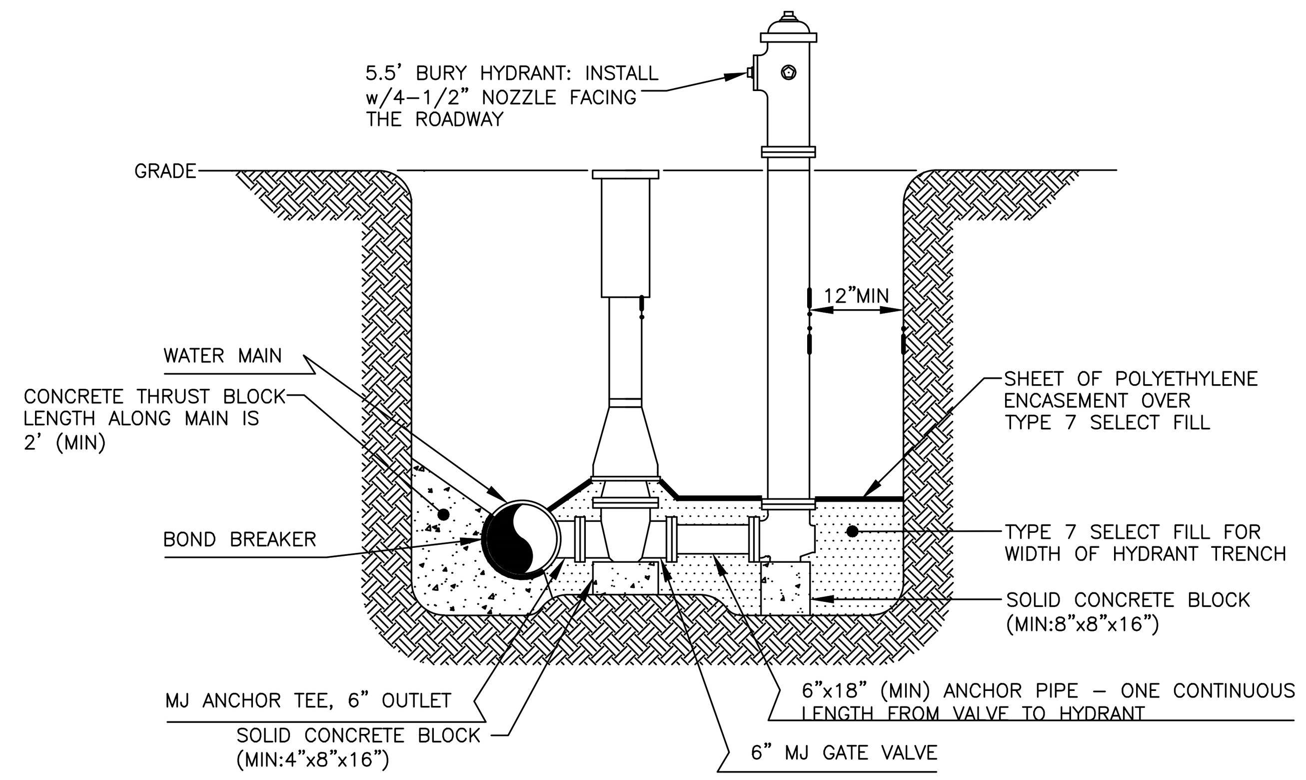

PERPENDICULAR HYDRANT ASSEMBLY

NOT TO SCALE

PIPE DIAMETER	BEND OR FITTING														
	11¼ DEGREE			22½ DEGREE			45 DEGREE			90 DEGREE			TEE*, CAP OR PLUG		
	H (FT)	W (FT)	A (FT)	H (FT)	W (FT)	A (FT)	H (FT)	W (FT)	A (FT)	H (FT)	W (FT)	A (FT)	H (FT)	W (FT)	A (FT)
8"	1.0	1.0	1.5	1.0	1.5	1.5	1.5	2.0	1.5	2.0	2.5	1.5	1.5	2.5	1.0

* SIZE BLOCK BASED ON BRANCH DIAMETER.

SOIL BEARING STRENGTH - PSF

PSI TEST PRESSURE

HORIZONTAL AND VERTICAL UP THRUST BLOCKS

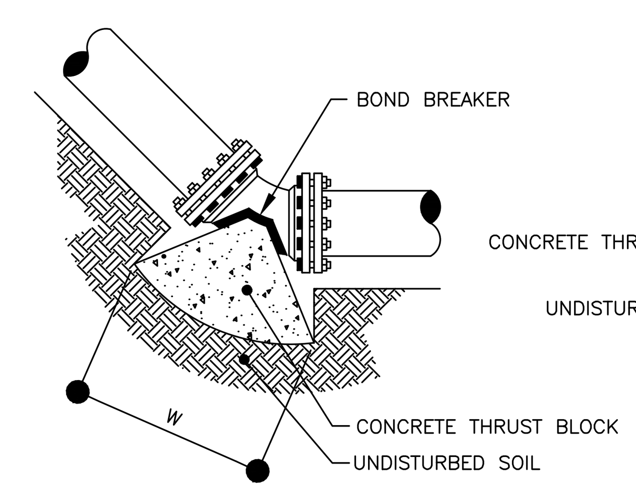

BEND PROFILE

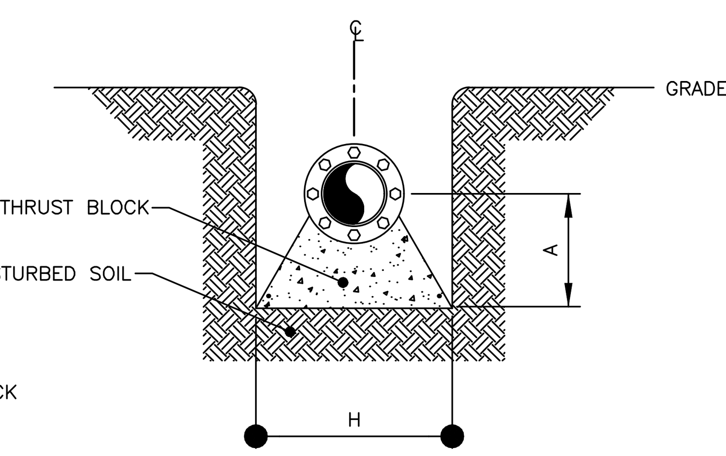

BEND ELEVATION

VERTICAL UP THRUST BLOCKS

NOT TO SCALE

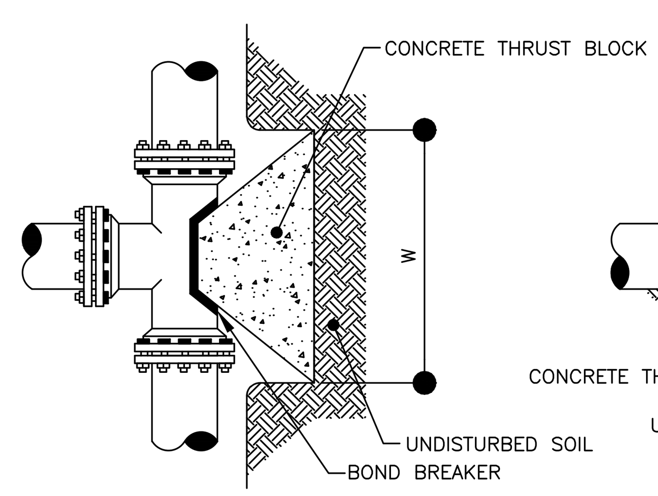

TEE PLAN

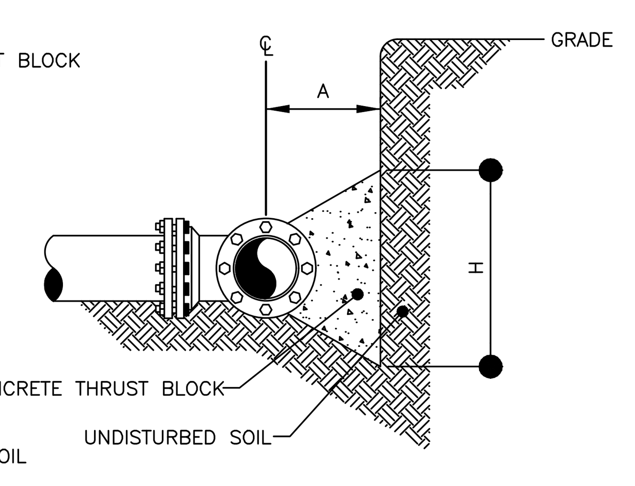

TEE ELEVATION

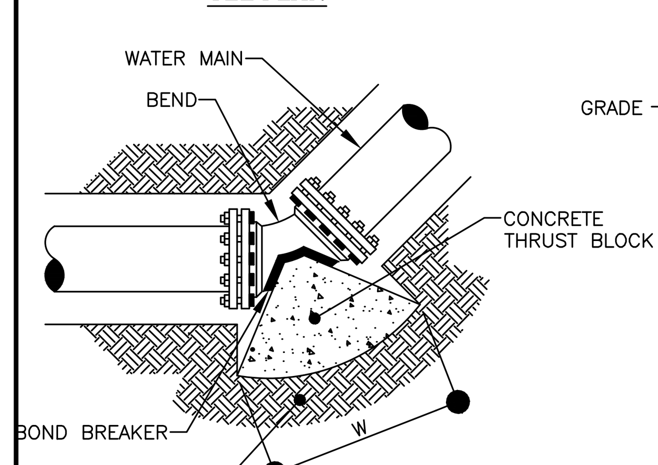

BEND PLAN

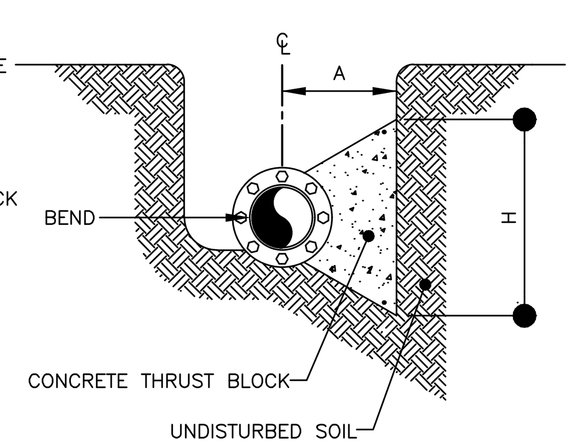

BEND ELEVATION

HORIZONTAL THRUST BLOCKS

NOT TO SCALE

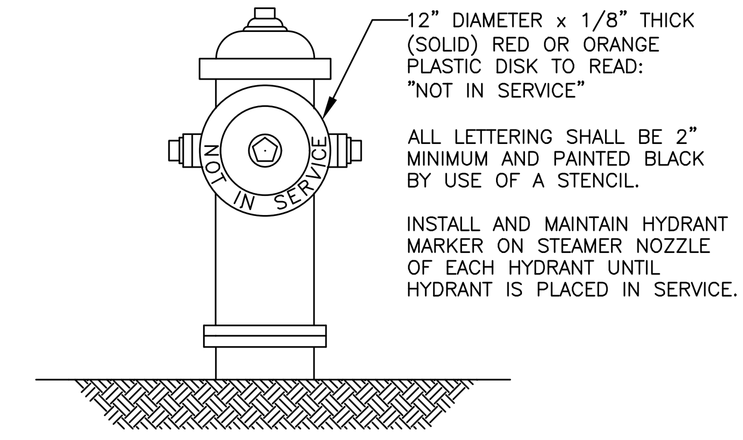

HYDRANT MARKER

NOT TO SCALE

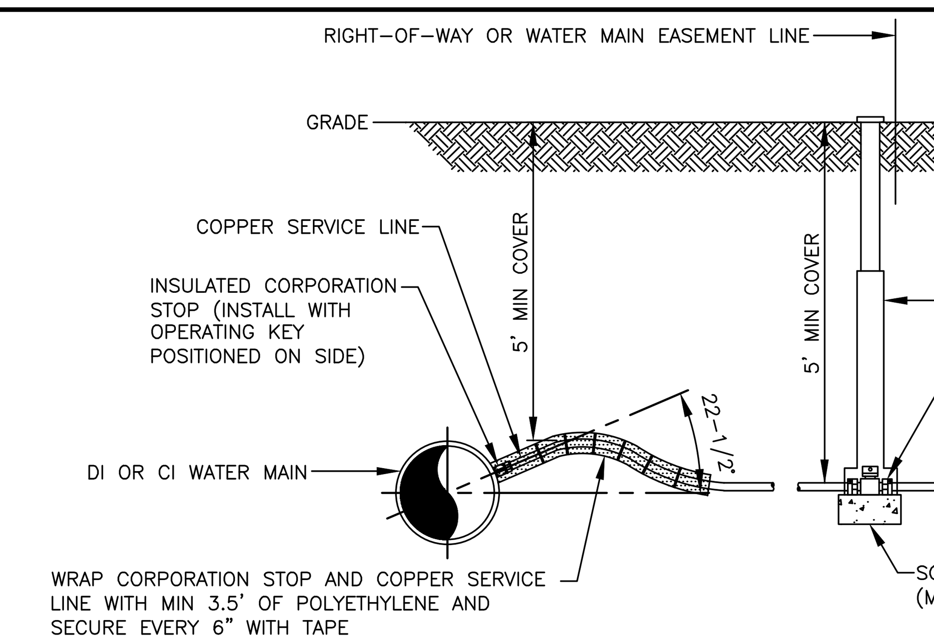

NOTE: 1. USE COPPER SERVICE UNLESS OTHERWISE APPROVED BY THE ENGINEER.

2. PRIOR TO TAPPING A POLY-WRAPPED MAIN, TIGHTLY WRAP THE MAIN/POLYWRAP WITH TWO LAYERS OF 8 MIL POLYETHYLENE ADHESIVE TAPE FOR A LENGTH OF 24", CENTERED AROUND TAP LOCATION. TAP MAIN THROUGH TAPE.

PIPE SIZE	D.I. PIPE OD (IN)	S (IN)
4"	4.8	2.83
6"	6.9	4.06
8"	9.05	5.33
10"	11.1	6.54
12"	13.2	7.78

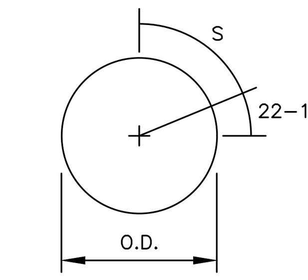

COPPER SERVICE INSTALLATION ON DI OR CI PIPE

NOT TO SCALE

PIPE DIAMETER	BEND															
	11¼ DEGREE				22½ DEGREE				45 DEGREE				90 DEGREE			
	L (FT)	W (FT)	H (FT)	VOL (CY)	L (FT)	W (FT)	H (FT)	VOL (CY)	L (FT)	W (FT)	H (FT)	VOL (CY)	L (FT)	W (FT)	H (FT)	VOL (CY)
8"	3.0	3.0	3.0	1.0	4.0	3.0	3.5	1.6	6.0	3.0	4.2	2.8	3.0	6.2	4.5	3.0

SOIL BEARING STRENGTH - PSF

PSI TEST PRESSURE

VERTICAL DOWN THRUST BLOCKS

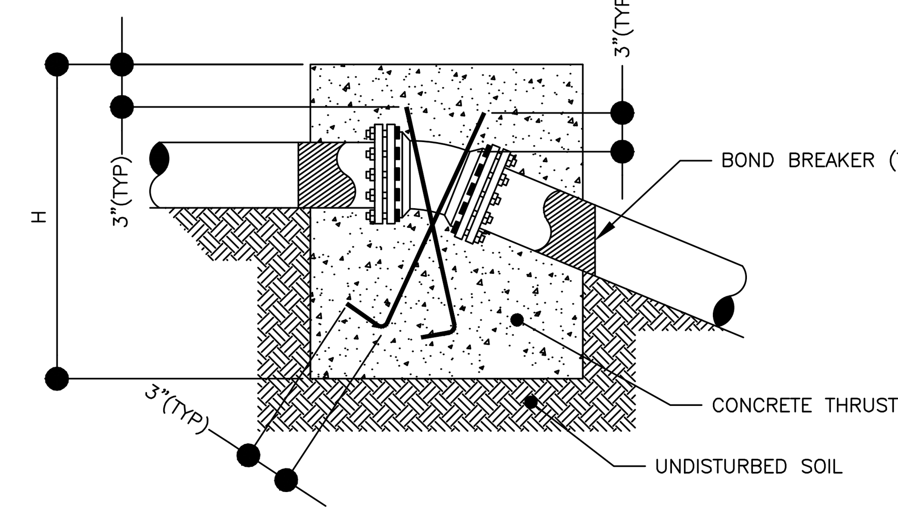

BEND ELEVATION

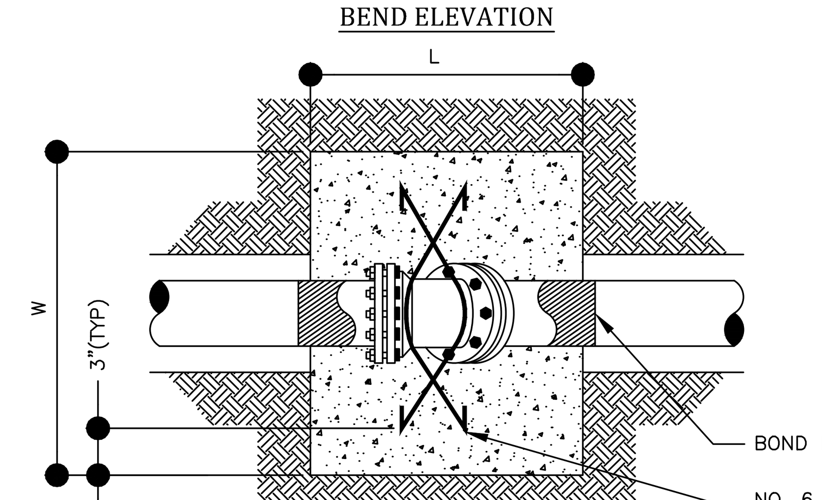

BEND PLAN

NOTES:
1. THRUST BLOCKS SHALL BE CENTERED HORIZONTALLY ON BENDS.
2. VOLUMES SHOWN IN CHART ARE MINIMUMS.

VERTICAL DOWN THRUST BLOCKS

NOT TO SCALE

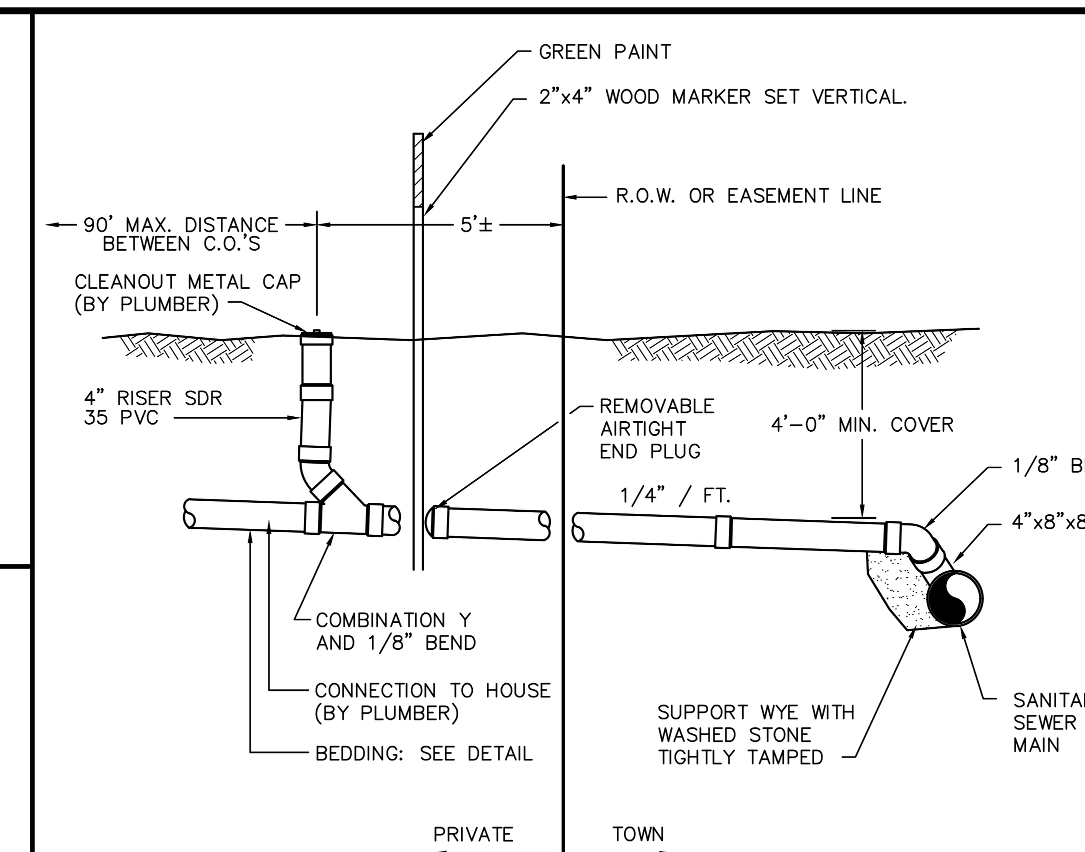

TYPICAL SANITARY SERVICE (CROSS SECTION)

N.T.S.

NOTE:
CLEANOUTS SHALL BE PROVIDED AT A MAXIMUM DISTANCE OF 75' AND ONE SHALL ALSO BE LOCATED ON THE R.O.W. LINE. WHERE AN EASEMENT IS PROVIDED, THE CLEANOUT SHALL BE LOCATED ON THE EASEMENT LINE.

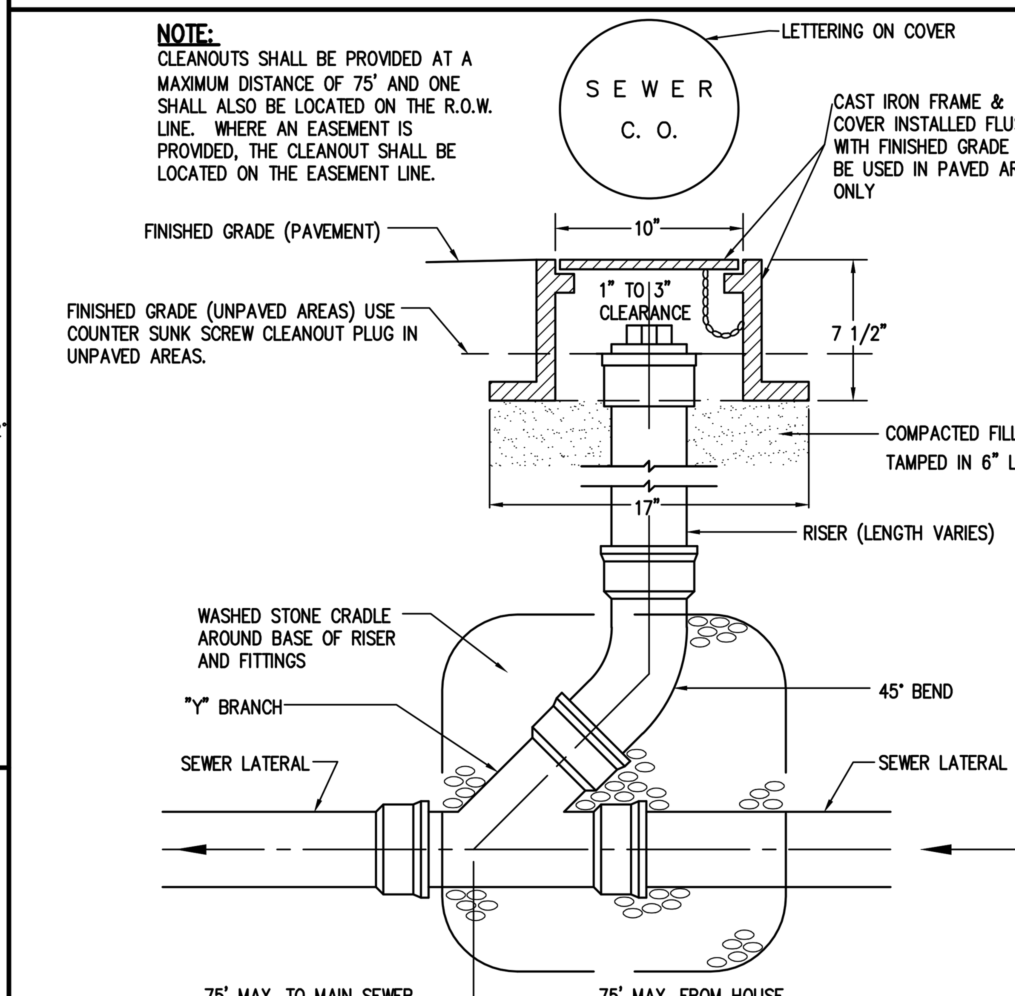

SANITARY CLEANOUT DETAIL IN PAVEMENT

N.T.S.

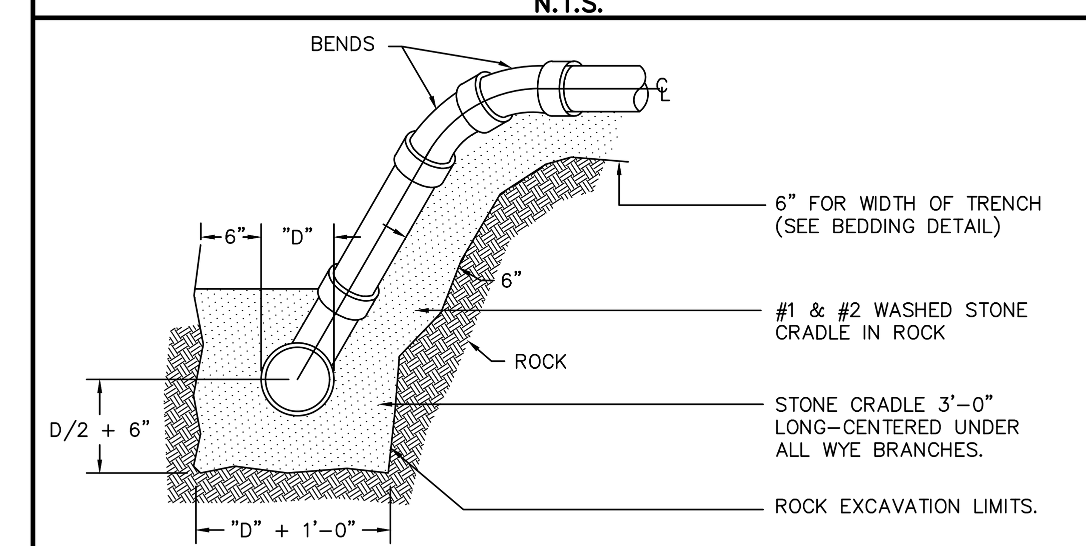

ROCK SECTION

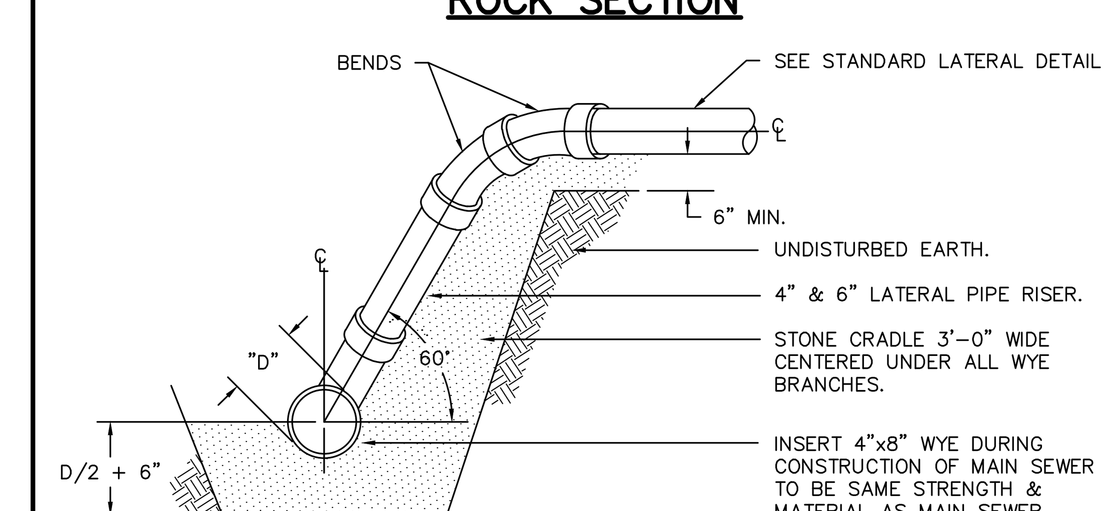

EARTH EXCAVATION

SANITARY SERVICE RISER CROSS-SECTION

N.T.S.

NOT APPROVED

This plan has not received final approval of all reviewing agencies. This plan is subject to revisions until all approvals are obtained and should not be used for construction purposes.

Drawing Alteration
The following is an excerpt from the New York State Education Law Article 145 Section 7209 and applies to this drawing:
"It is a violation of this law for any person, unless he is acting under the direction of a licensed professional engineer or land surveyor to alter any item in any way. If an item bearing the seal of an engineer or land surveyor is altered, the altering engineer or land surveyor shall affix to the item his seal and the notation "altered by" followed by his signature and the date of such alteration, and a specific description of the alteration."

	REVISIONS	DATE	BY
7			
6			
5			
4			
3			
2	REVISED PER TOWN & AGENCY COMMENTS & GRADING	9/19/25	AND
1	REVISED PER TOWN & AGENCY COMMENTS	8/1/24	AND

BME ASSOCIATES
ENGINEERS • SURVEYORS • LANDSCAPE ARCHITECTS
10 LIFT BRIDGE LANE EAST
FAIRPORT, NEW YORK 14450
WWW.BMEPC.COM
585-377-7360

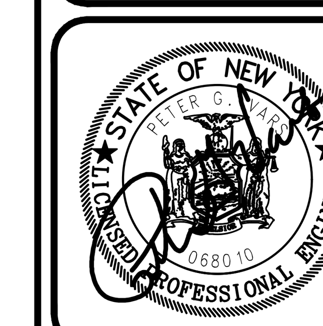

PROJECT: COVENTRY RIDGE SUBDIVISION SECTION 3

LOCATION: TOWN OF PITTSFORD, MONROE COUNTY, NEW YORK STATE

CLIENT: CLOVER STREET DEVELOPMENT CORPORATION, 30 GROVE STREET, PITTSFORD, NY 14534

FINAL

DRAWING TITLE: DETAIL SHEET

PROJECT MANAGER	P. VARS
PROJECT ENGINEER	F. SHELLEY
DRAWN BY	A. D'ANGELO
SCALE	N.T.S.
DATE ISSUED	APRIL 3, 2024
PROJECT NO.	9502F
DRAWING NO.	09

P:\9502F\Drawings\Final\9502F Detail Base.dwg

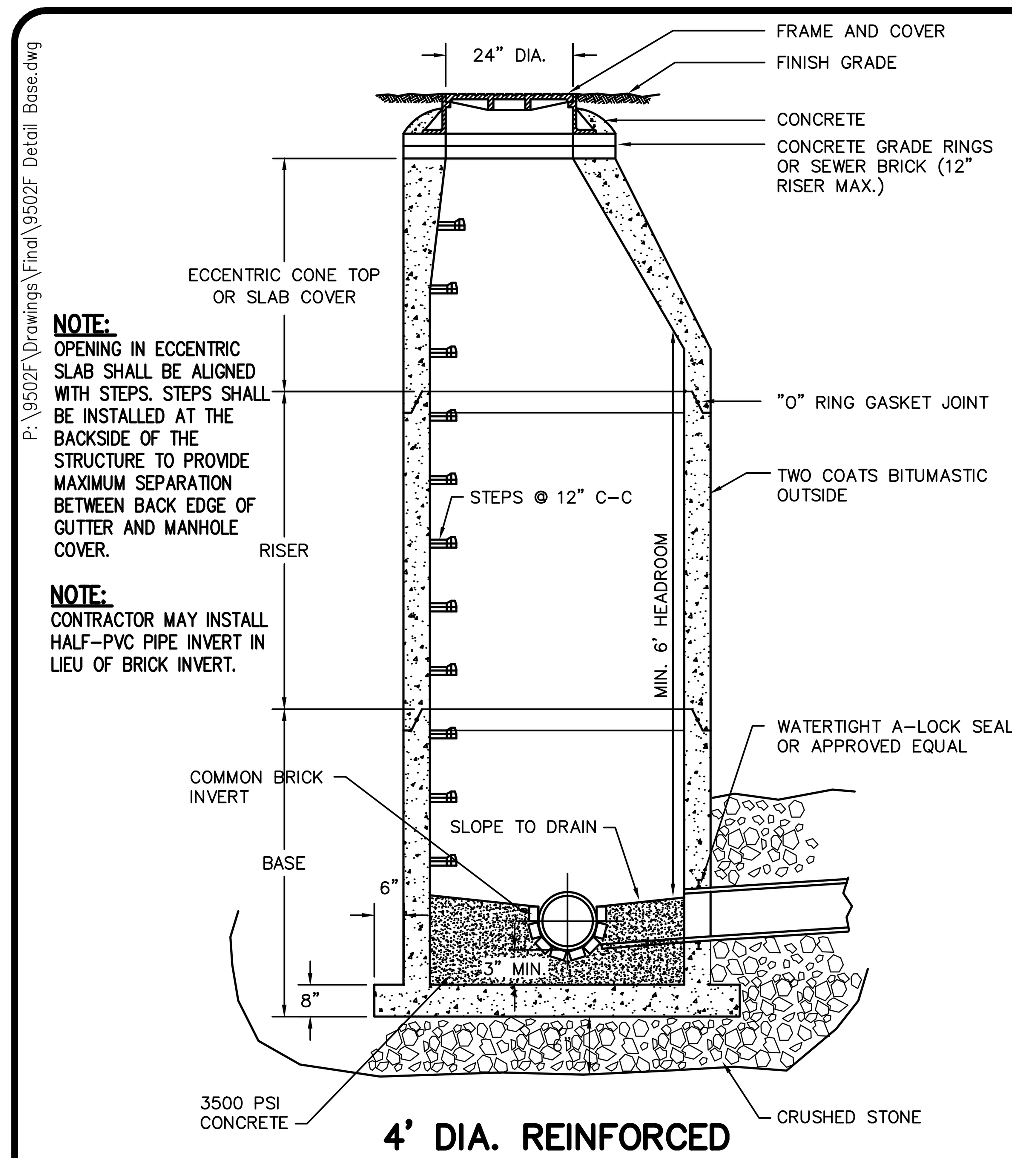

NOTE: OPENING IN ECCENTRIC SLAB SHALL BE ALIGNED WITH STEPS. STEPS SHALL BE INSTALLED AT THE BACKSIDE OF THE STRUCTURE TO PROVIDE MAXIMUM SEPARATION BETWEEN BACK EDGE OF GUTTER AND MANHOLE COVER.

NOTE: CONTRACTOR MAY INSTALL HALF-PVC PIPE INVERT IN LIEU OF BRICK INVERT.

4' DIA. REINFORCED PRECAST CONCRETE MANHOLE — S-2
N.T.S.

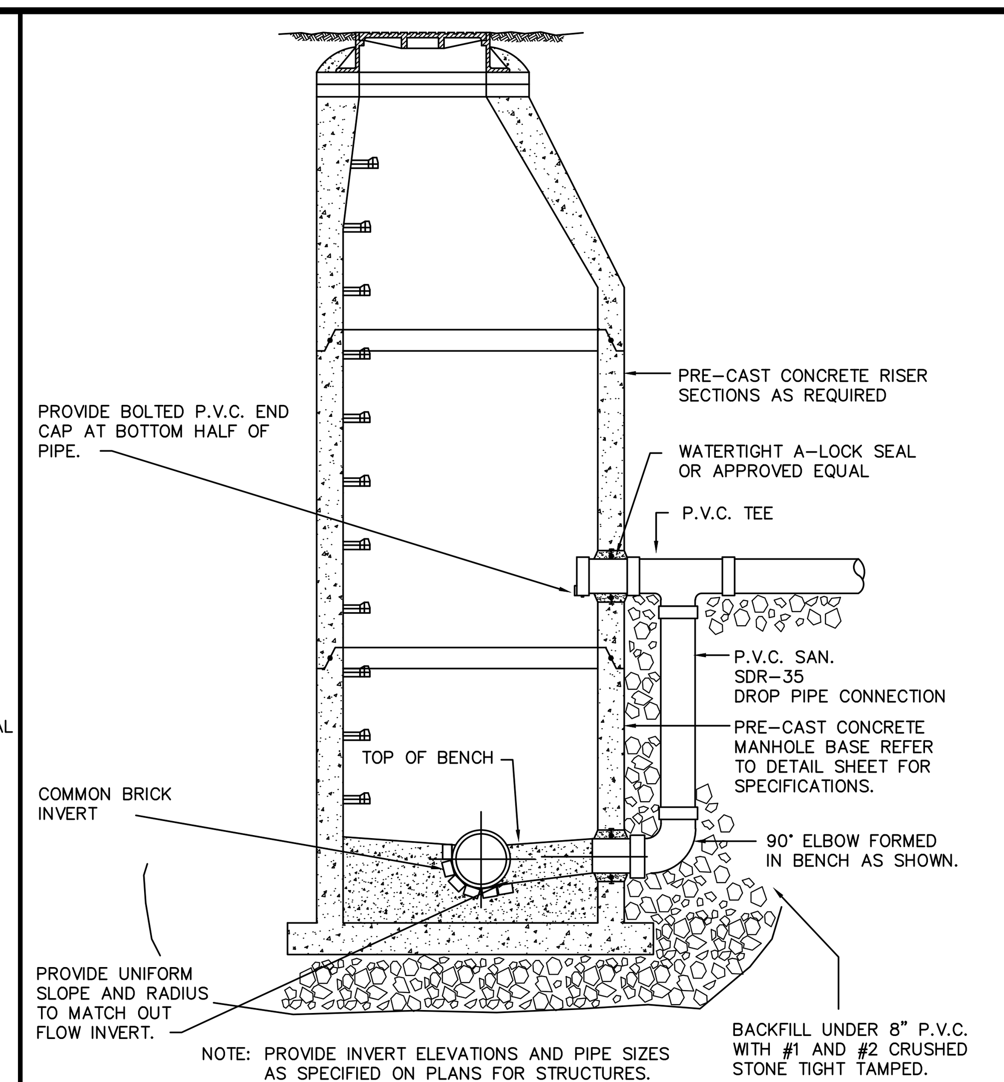

NOTE: PROVIDE INVERT ELEVATIONS AND PIPE SIZES AS SPECIFIED ON PLANS FOR STRUCTURES.

SANITARY MANHOLE OUTSIDE DROP CONNECTION — S-7
N.T.S.

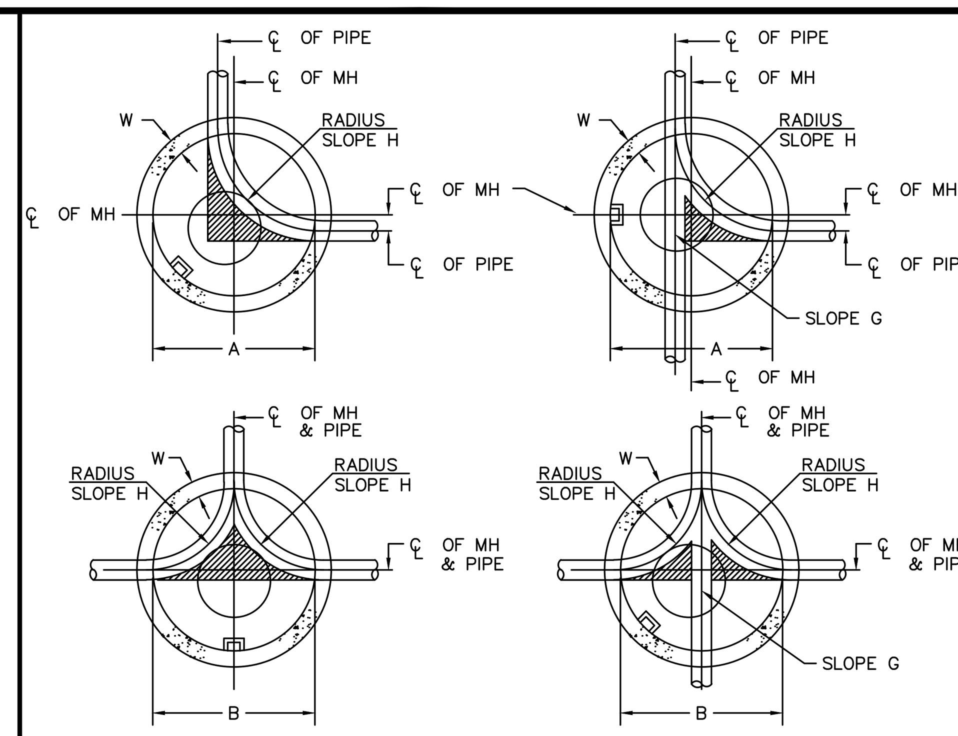

SEWER PIPE DIA.		8"	10"	12"	15"	18"
MANHOLE DIA.	A	4'–0"	4'–0"	4'–0"	5'–0"	5'–0"
	B	5'–0"	5'–0"	5'–0"	5'–0"	5'–0"
INVERT SLOPE	G	0.1'	0.1'	0.1'	0.08'	0.05'
	H	0.3'	0.3'	0.2'	0.15'	0.2'

MH BARREL WALL THICKNESS		
A	4'–0"	5'–0"
B	–	5'–0"
W	5"	6"

NOTE: WHERE INLET AND OUTLET PIPES ARE OF DIFFERENT DIAMETERS THE SLOPE MUST NOT BE LESS THAN THE DIFFERENCE IN DIAMETER OR GREATER THAN 9".

STANDARD MANHOLE DIMENSIONS (FOR SANITARY MANHOLES) — S-10
N.T.S.

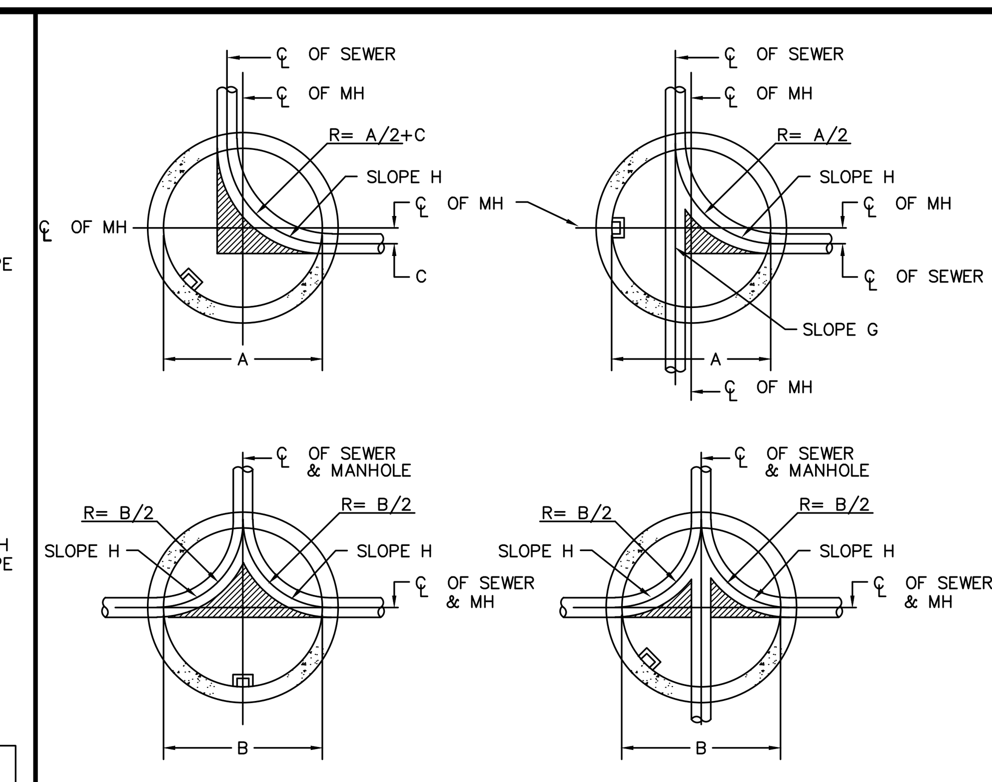

MAX. PIPE DIA.		8"	10"	12"	14"	16"	18"	20"	24"	27"	30"	36"	42"	48"
DIMENSION	A	4'–0"	4'–0"	4'–0"	5'–0"	5'–0"	5'–0"	5'–0"	6'–0"	6'–0"	6'–0"	6'–0"	6'–0"	6'–0"
	B	5'–0"	5'–0"	5'–0"	5'–0"	5'–0"	5'–0"	5'–0"	6'–0"	6'–0"	6'–0"	6'–0"	6'–0"	6'–0"
	C	4"	5"	6"	7"	8"	9"	10"	12"	13.5"	15"	18"	21"	24"
	G	.05'	.05'	.05'	.04'	.02'	.02'	.02'	.02'	.02'	.02'	.02'	.02'	.02'
	H	.10'	.10'	.10'	.07'	.05'	.05'	.05'	.05'	.05'	.05'	.05'	.05'	.05'

NOTE: WHEN A SMALLER SEWER JOINS A LARGER ONE, PLACE THE 0.8 DEPTH POINT OF BOTH SEWERS AT THE SAME ELEVATION.

STANDARD MANHOLE DIMENSIONS (FOR STORM MANHOLES) — ST-5
N.T.S.

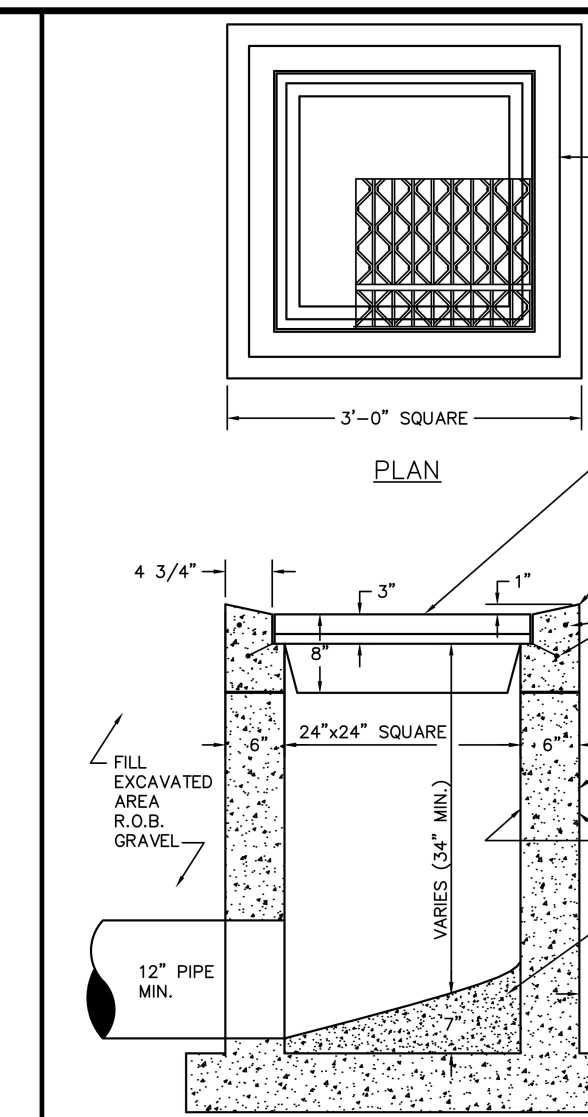

NOTE: METAL TOWN OF PITTSFORD MARKERS TO BE INSTALLED ON ALL CATCH BASINS UPON UNIT CONSTRUCTION. THE TOWN WILL PROVIDE THE MARKERS TO THE DEVELOPER.

STANDARD 2' X 2' FIELD INLET — ST-3
N.T.S.

Drawing Alteration

The following is an excerpt from the New York State Education Law Article 145 Section 7209 and applies to this drawing:
"It is a violation of this law for any person, unless he is acting under the direction of a licensed professional engineer or land surveyor to alter any item in any way. If an item bearing the seal of an engineer or land surveyor is altered, the altering engineer or land surveyor shall affix to the item his seal and the notation "altered by" followed by his signature and the date of such alteration, and a specific description of the alteration."

No.	REVISIONS	DATE	BY
7			
6			
5			
4			
3			
2	REVISED PER TOWN & AGENCY COMMENTS & GRADING	9/19/25	AND
1	REVISED PER TOWN & AGENCY COMMENTS	8/1/24	AND

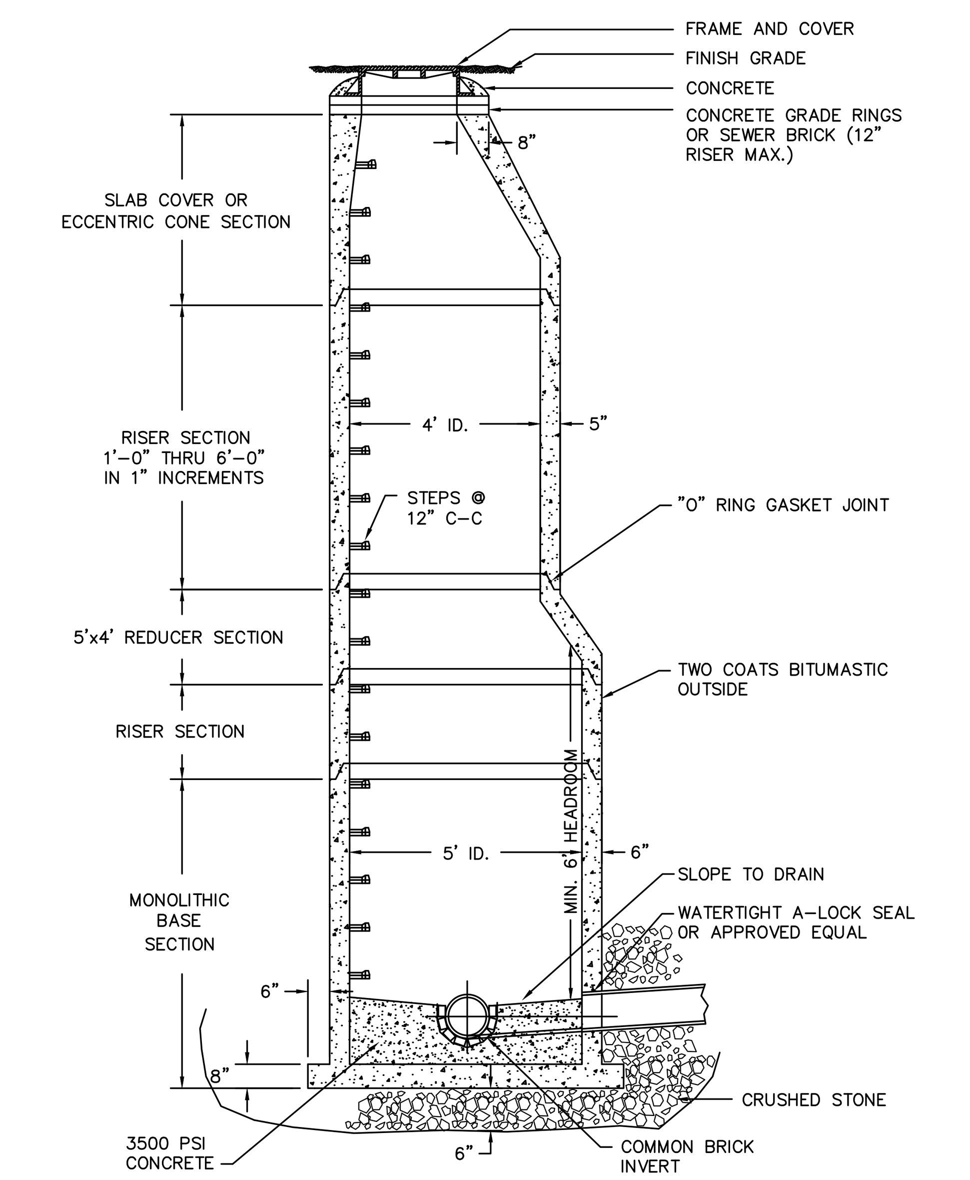

5 DIA. REINFORCED PRECAST CONCRETE MANHOLE — S-4
N.T.S.

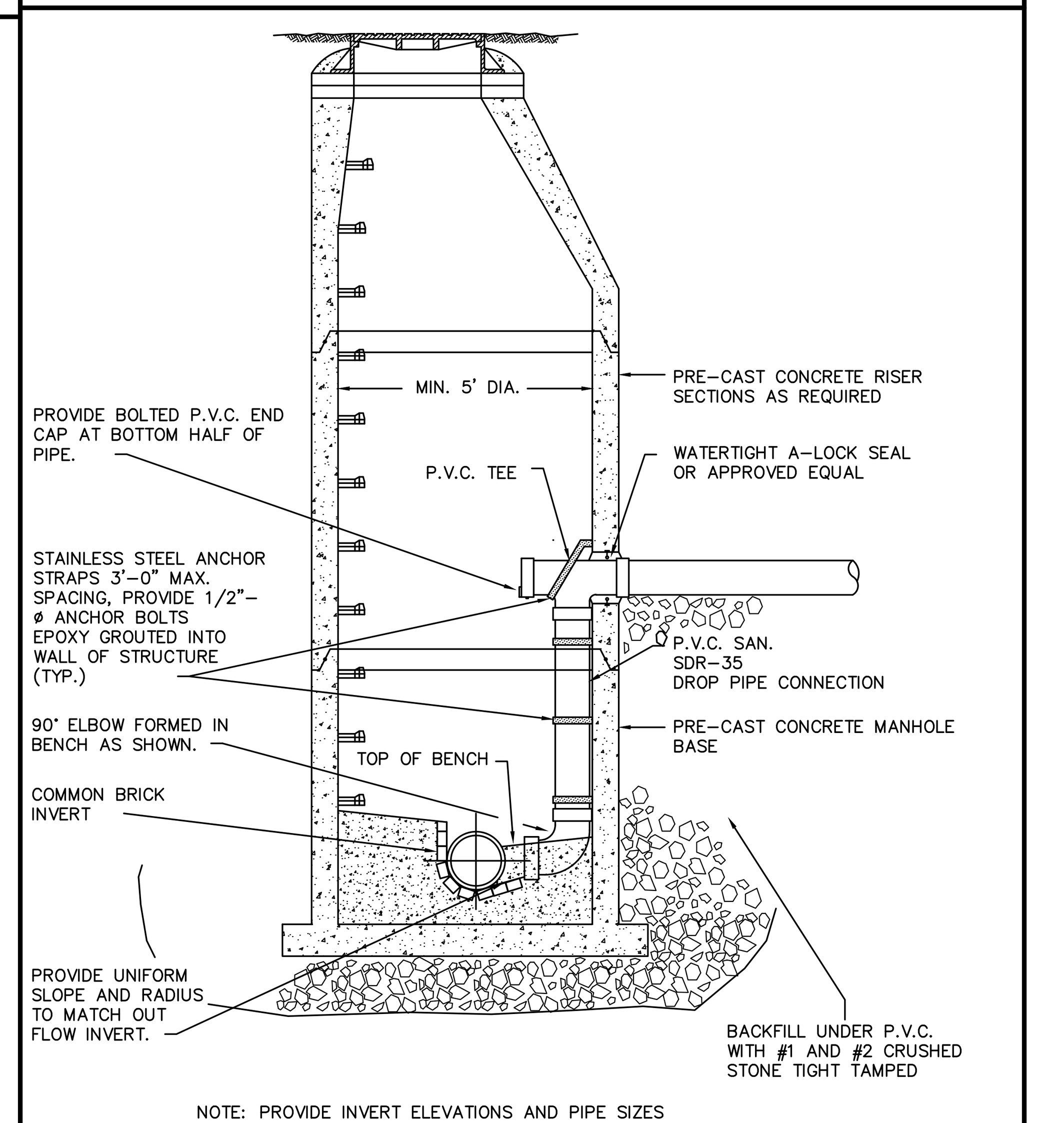

NOTE: PROVIDE INVERT ELEVATIONS AND PIPE SIZES AS SPECIFIED ON PLANS FOR STRUCTURES.

SANITARY MANHOLE INSIDE DROP CONNECTION — S-6
N.T.S.

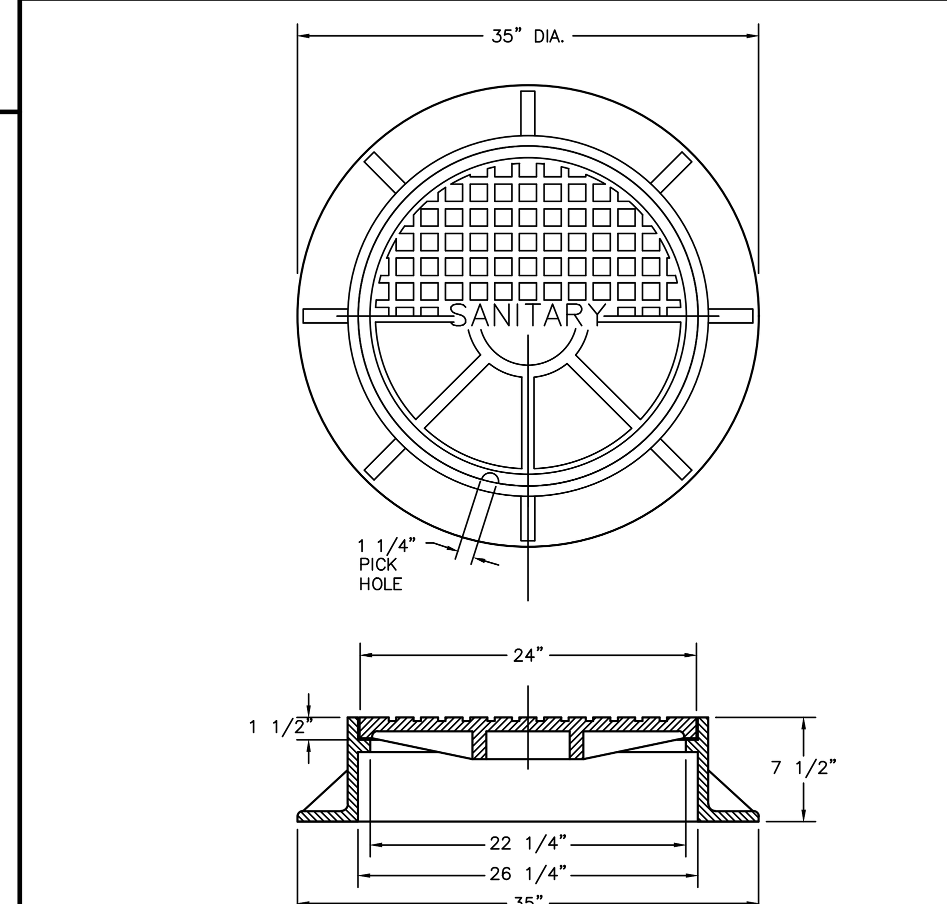

MANHOLE COVER:

NEENAH R1726A OR EQUAL TO MEET THE FOLLOWING:

1. MATERIAL: A.S.T.M. SPEC. A-48, CLASS 30
2. HORIZONTAL BEARING SURFACES TO BE MACHINED.
3. COVER SHALL READ "SANITARY"

MANHOLE FRAME:

NEENAH R-1726A OR EQUAL TO MEET THE FOLLOWING:

1. MATERIALS: A.S.T.M. SPEC. A-48, CLASS 30
2. HORIZONTAL BEARING SURFACES TO BE MACHINED.

SANITARY SEWER MANHOLE COVER AND FRAME — S-9
N.T.S.

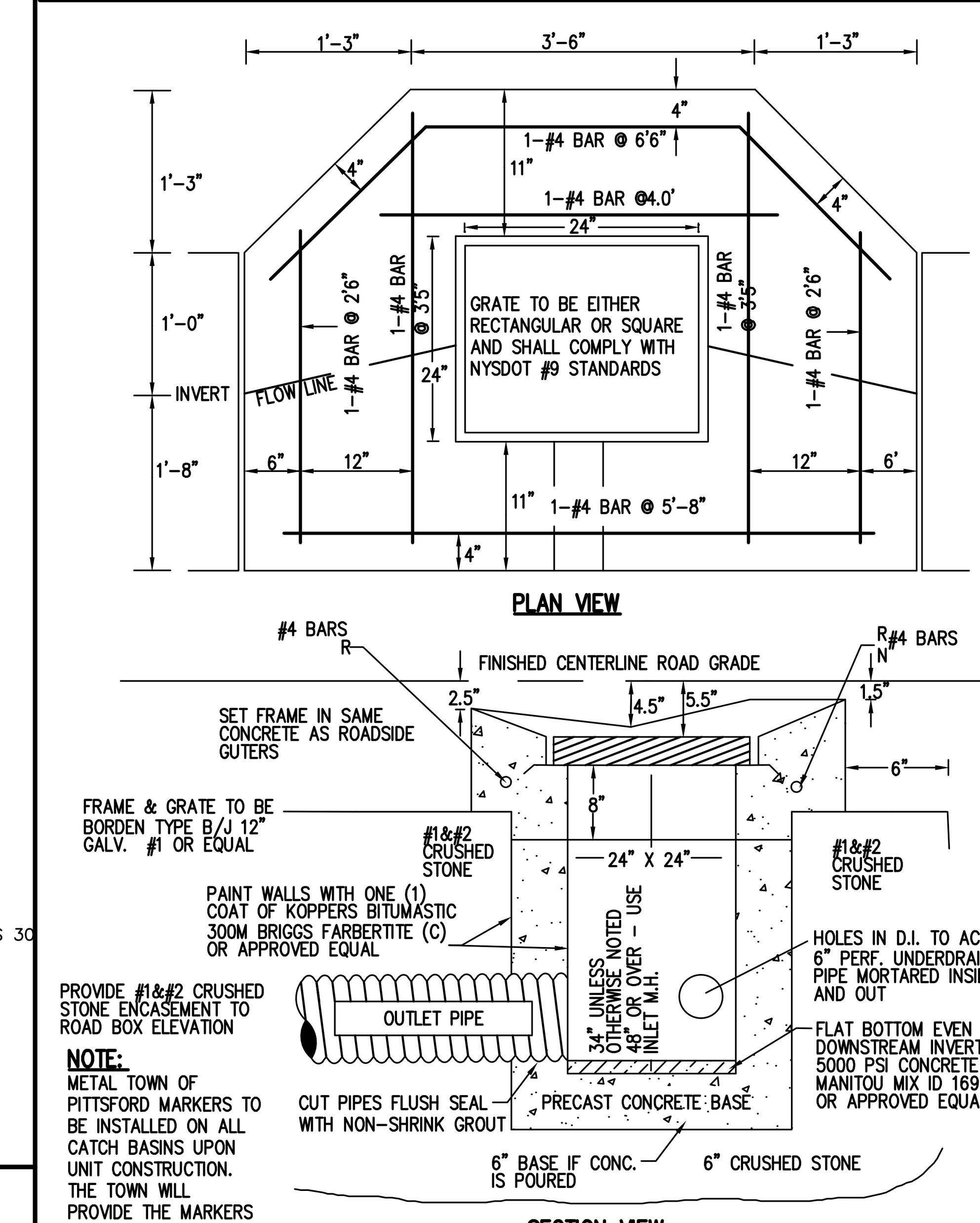

NOTE: METAL TOWN OF PITTSFORD MARKERS TO BE INSTALLED ON ALL CATCH BASINS UPON UNIT CONSTRUCTION. THE TOWN WILL PROVIDE THE MARKERS TO THE DEVELOPER.

PRECAST CONCRETE GUTTER INLET DETAIL
N.T.S.

NOTES: A. RISER AND COVER SLAB JOINTS AND LIFT HOLES SHALL BE FILLED WITH NON-SHRINK GROUT AND SEALED WITH TWO (2) COATS OF APPROVED HEAVY DUTY COAL TAR SEALER.
B. MORTAR SHALL BE ONE (1) PART PORTLAND CEMENT, ONE AND ONE-HALF (1 1/2) PART CLEAN SAND.

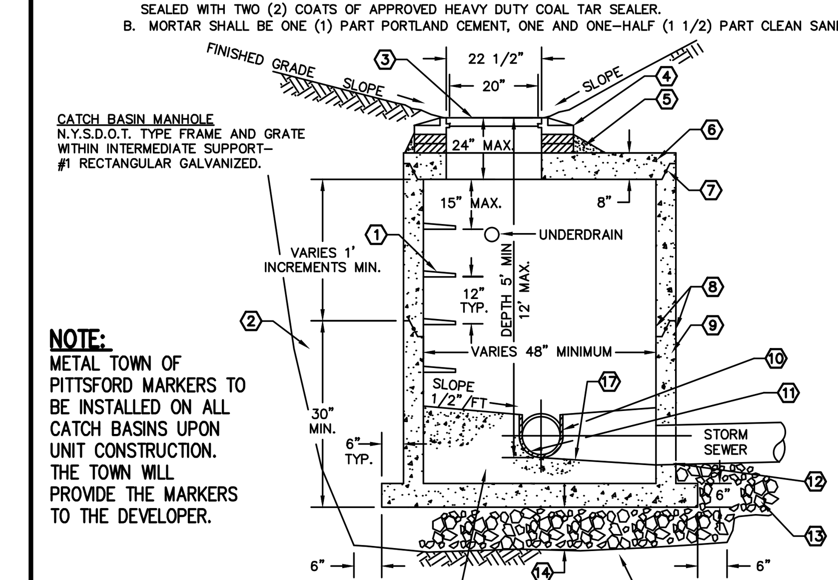

NOTE: METAL TOWN OF PITTSFORD MARKERS TO BE INSTALLED ON ALL CATCH BASINS UPON UNIT CONSTRUCTION. THE TOWN WILL PROVIDE THE MARKERS TO THE DEVELOPER.

1. CAST IRON STEMS TO BE INSTALLED AT ALTERNATE JOINTS AND SHALL BE ASPHALT STEPS TO BE NEENAH FOUNDRY R-1980-1 STEEL REINFORCED COPOLYMER POLYPROPYLENE OR APPROVED EQUAL.
2. BACKFILL SHALL BESELECT BACKFILL (AS PER NYSDOT SPEC. 203-2.02) IF OUTSIDE PAVEMENT. IF IN PAVEMENT BACKFILL SHALL BE CRUSHER RUN STONE (NYSDOT SPEC. 304-2.02, TYPE 2 STONE.)
3. CAST IRON FRAME & COVER TO BE NEENAH FOUNDRY R-1723 OR EQUAL WITH MACHINED BEARING SURFACE AND PERFORATED COVER. SET SET IN MORTAR BED WITH MORTAR FILL ALL AROUND.
4. BRICK OR PRECAST SPACERS- TWO (2) COURSE MAX. 1" MORTAR BED FOR LEVELING.
5. FILL WITH CONCRETE EXCEPT IN PAVEMENT.
6. PRECAST ECCENTRIC FLAT REINFORCED CONCRETE COVER WITH 24" DIA. M.O. TO BE DESIGNED AND CONSTRUCTED FOR H-20 HIGHWAY LOADING.
7. SUPER "O" RING JOINT AND GASKETS, ASTM C-443 (TYP.)
8. COAT WITH (2) TWO COATS OF KOPPERS SUPER SERVICE BLACK.
9. PRECAST REINFORCED CONCRETE MANHOLE CONFORMING TO ASTM C-478
10. 1/2 SECTION OF PIPE BUILT UP OR BRICK INVERT.
11. INVERT TO BE SMOOTH AND EVEN.
12. PREFORMED OPENING- FILL JOINT ALL AROUND PIPE WITH NON-SHRINK GROUT AND SEAL WITH TWO (2) COATS OF APPROVED HEAVY DUTY COAT TAR SEALER.
13. PIPE BEDDING MATERIAL TYPE AND QUANTITY DEPENDENT ON PIPE MATERIAL AND SOIL CONDITIONS.
14. 6" MINIMUM #1 AND #2 CRUSHED STONE (NYSDOT GRADATION TABLE 703-4) LEVELING BASE THOROUGHLY COMPACTED.
15. UNDISTURBED EARTH.
16. 3000# CONCRETE BENCH AND INVERT. BENCH SET AT TOP OF PIPE SLOPE.
17. SPRAY INSIDE WITH GUTTER SEALER.

STANDARD STORM AND CATCH BASIN MANHOLE — ST-1
N.T.S.

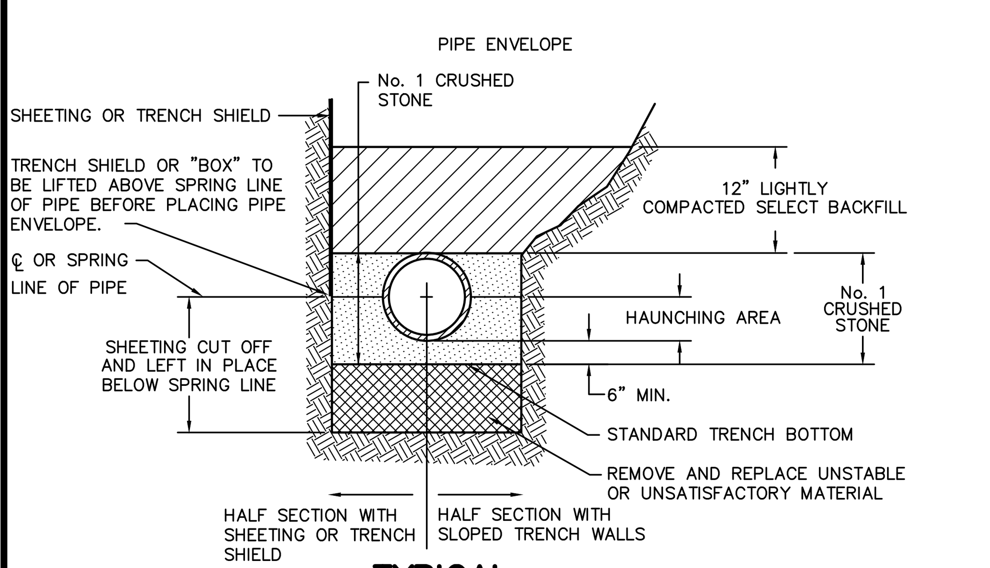

TYPICAL PIPE TRENCH SECTION — S-12
N.T.S.

COPYRIGHT © 2024
BME Associates

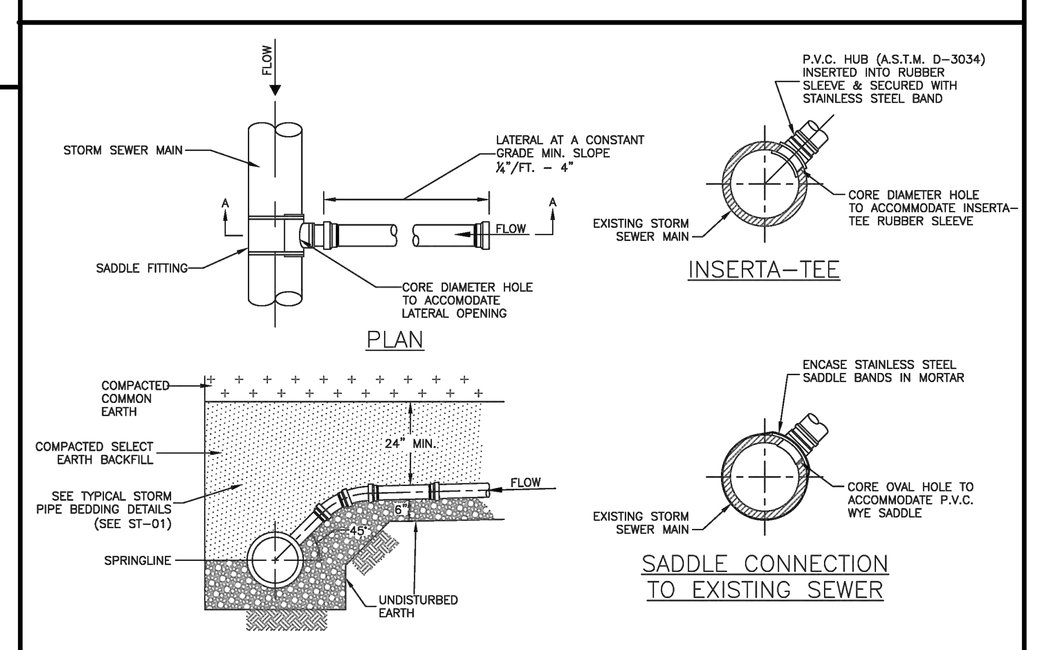

LATERAL CONNECTION TO EXISTING STORM SEWER VIA INSERT-A-TEE
N.T.S.

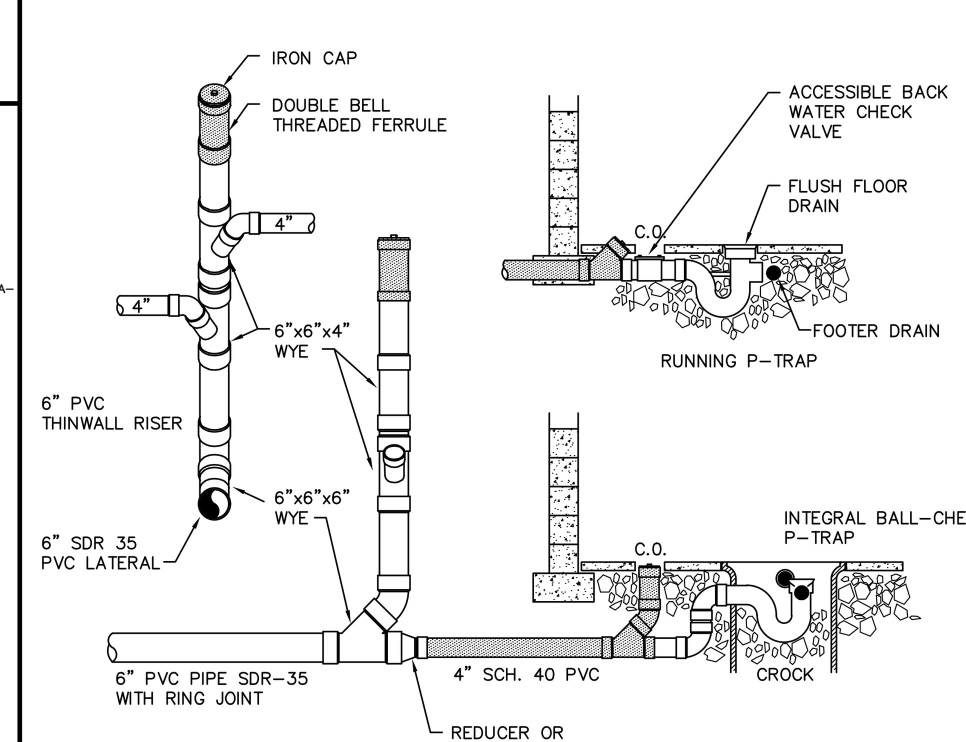

TYPICAL ROOF RUNOFF CONDUCTOR AND FOOTER DRAIN — S-13
N.T.S.

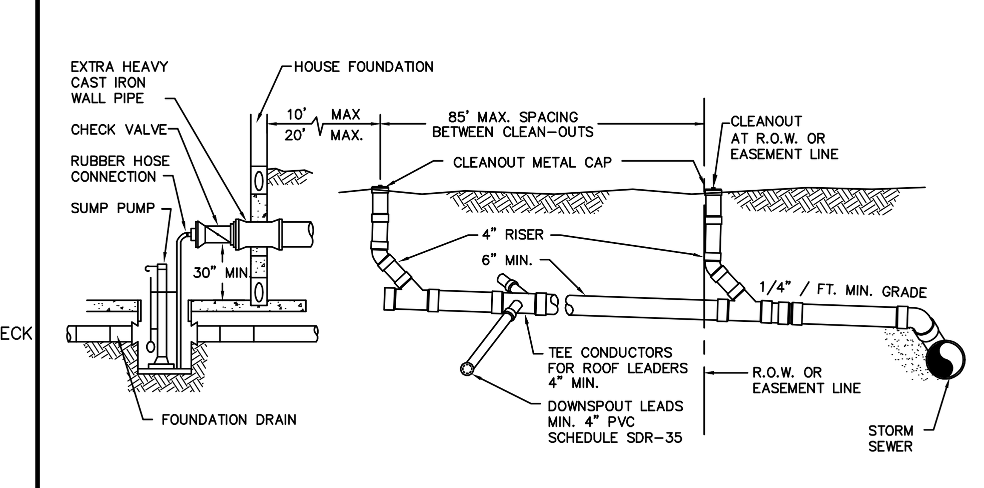

TYPICAL ROOF CONDUCTOR AND FOOTER DRAIN LATERAL — ST-6 (REV.5/2/24)
N.T.S.

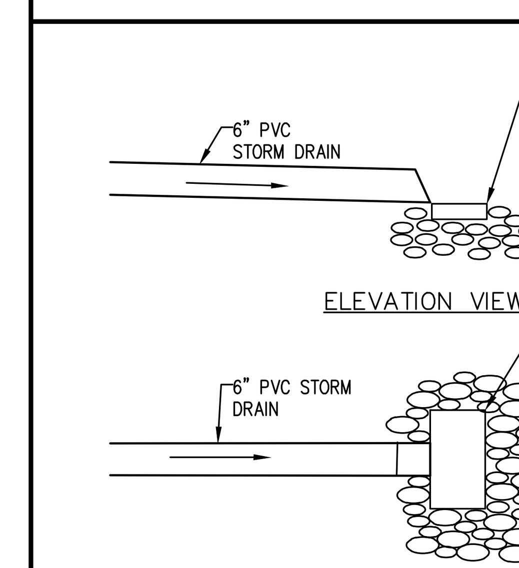

REAR STORM LATERAL COBBLE SPLASH BLOCK
(N.T.S.)

NOT APPROVED

This plan has not received final approval of all reviewing agencies. This plan is subject to revisions until all approvals are obtained and should not be used for construction purposes.

BME | ASSOCIATES
ENGINEERS • SURVEYORS • LANDSCAPE ARCHITECTS
10 LIFT BRIDGE LANE EAST
FAIRPORT, NEW YORK 14450
WWW.BMEPC.COM
585-377-7360

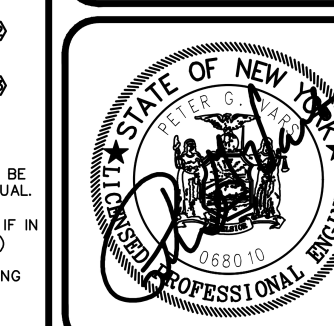

PROJECT: COVENTRY RIDGE SUBDIVISION SECTION 3
LOCATION: TOWN OF PITTSFORD, MONROE COUNTY, NEW YORK STATE
CLIENT: CLOVER STREET DEVELOPMENT CORPORATION, 30 GROVE STREET, PITTSFORD, NY 14534
DRAWING TITLE: FINAL DETAIL SHEET

PROJECT MANAGER	P. VARS
PROJECT ENGINEER	F. SHELLEY
DRAWN BY	A. D'ANGELO
SCALE	N.T.S.
DATE ISSUED	APRIL 3, 2024
PROJECT NO.	9502F
DRAWING NO.	10

P:\9502F\Drawings\Final\9502F Detail Base.dwg

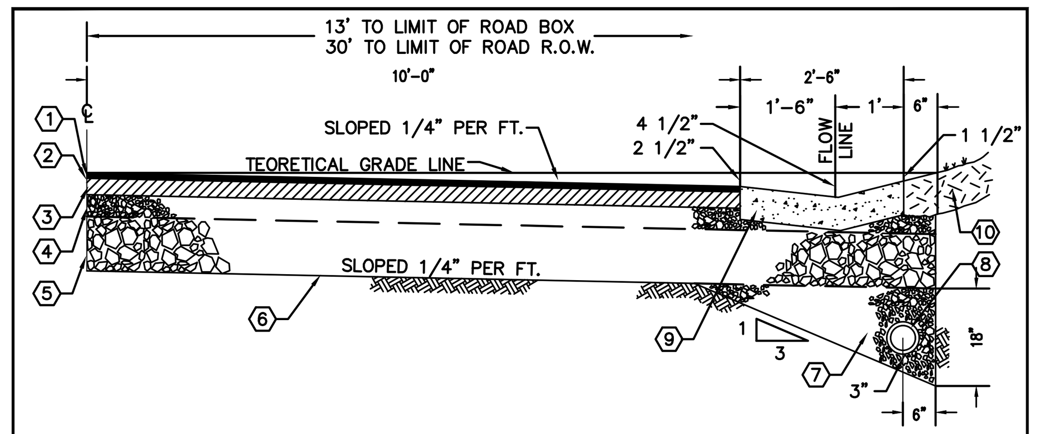

(1) 1" MIN. COMPACTED THICKNESS BITUMINUM ASPHALT CONCRETE ITEM #403.18 TYPE 7 TOP COURSE TO BE PREPARED AND PLACED IN ACCORDANCE WITH NYSDOT STD. SPECS. SEC. 400.

(2) BITIMINUS TACK COAT ACCORDING TO NYSDOT STD. SPECS. SEC. 407. MINIMUM 0.05 GALS. PER SQ. YD. OR AS CONDITIONS DICTATE. USE OF THIS MATERIAL SHALL BE BASED ON CONDITION OF BINDER SURFACE PRIOR TO PLACEMENT OF TOP COURSE AND/OR SHALL BE REQUIRED ONLY WHEN REQUESTED BY THE PITTSFORD HWY SUPERINTENDENT.

(3) 3" MIN. COMPACTED THICKNESS BITUMINUS ASPHALT CONCRETE ITEM #403.13 TYPE 3 BINDER COURSE. TO BE PREPARED AND PLACED IN ACCORDANCE WITH NYSDOT STD. SPECS. SEC 400.

(4) 4" LIFT (MIN. COMPACTED THICKNESS) ITEM #304-2.02 TYPE 2 CRUSHER RUN SUBBASE MATERIAL TO BE PREPARED AND PLACED IN ACCORDANCE WITH NYSDOT STD. SPECS. SEC. 304.

(5) 8" COMPACTED THICKNESS NYSDOT ITEM #703-0201 CRUSHED STONE (PG. 7-14) PRIMARY SIZE 3" AND 4". TO BE FURNISHED AND PLACED IN ACCORDANCE WITH NYSDOT STD. SPECS. SEC. 304.

(6) SUBGRADE AND/OR EMBANKMENT AREAS SHALL MEET 95% OPTIMUM SENSITY ACCORDING TO MODIFIED PROCTOR METHOD DETERMINED BY TOWN APPROVED FIELD SAMPLE. ALL OTHER ASPECTS OF PREPARATION AND PLACEMENT SHALL BE IN ACCORDANCE WITH NYSDOT STD. SPECS. SEC. 203.

(7) COMPACTED CRUSHED STONE WEEP OF #2 STONE AND/OR #1 STONE AS PER NYSDOT SEC 703 AND TABLE 703-4.

(8) 6" DIA. PERFORATED POLYETHYLENE UNDERDRAIN PIPE HANDCOR AGRIFLOW OR APPROVED ASTM F-405. ELIMINATION OF 6" WEEP PIPE AND ACCEPTANCE OF ALTERNATE WEEP DESIGN WILL BE CONSIDERED APPROPRIATE AND MAY BE APPROVED OR REQUIRED BY HWY. SUPERINTENDENT WHEN THE FOLLOWING CONDITIONS ARE ENCOUNTERED:

A. SOIL TYPE IS LISTED AS AASHO, A-1, OR A-2 IN MONROE CO. SOIL SURVEY.
B. INDEPENDENT SOIL TEST RESULTS TAKEN AT 500' INTERVALS 5' BELOW FINISHED GRADE INDICATE LESS THAN 35% OF MATERIAL BY WEIGHT PASSES A #200 SIEVE AND GROUNDWATER TABLE IS DEEPER THAN 5' BELOW SUBGRADE SURFACE.

(9) 6" MIN. THICKNESS PORTLAND CEMENT AIR ENTRAINED CONCRETE GUTTER. 4000 PSI MIN. 28 DAY COMPRESSIVE STRENGTH. CONCRETE SHALL BE PREPARED, SUPPLIED, AND PLACED IN ACCORDANCE WITH ALL APPLICABLE PORTIONS OF NYSDOT STD. SPECS. SECS. 501 AND 609. DESIGN MIX SUBJECT TO APPROVAL BY DPW.

(10) 4"-6" TOPSOIL FURNISHED AND PLACED IN ACCORDANCE WITH NTSDOT STD. SPEC. SEC. 613. IF TESTED, MATERIAL SHALL CONFORM WITH SEC. 713-01.

DETAIL No.	
H-1	TYPICAL ROAD CROSS-SECTION DEDICATED HIGHWAY N.T.S.
REVISIONS	

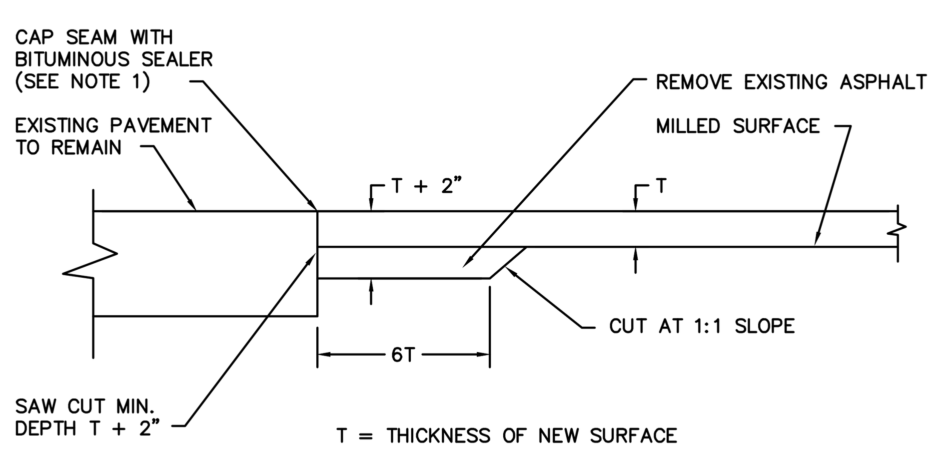

NOTES:

1. ALL SEAMS BETWEEN EXISTING AND NEW ASPHALT SURFACES SHALL BE SEALED WITH AN ASPHALT FILLER CORRISPONDING TO THE MATERIAL REQUIREMENTS OF NYSDOT MATERIAL DESIGNATION 702-05 OR 702-3401. COST TO CONSTRUCT KEY AND TO FURNISH AND APPLY SEALER TO BE INCLUDED IN PRICE BID FOR ASPHALT TOP.
2. KEYS SHALL BE CONSTRUCTED THE SAME DAY THAT NEW ASPHALT TOP IS PLACED.

PAVEMENT KEY

N.T.S.

H-9

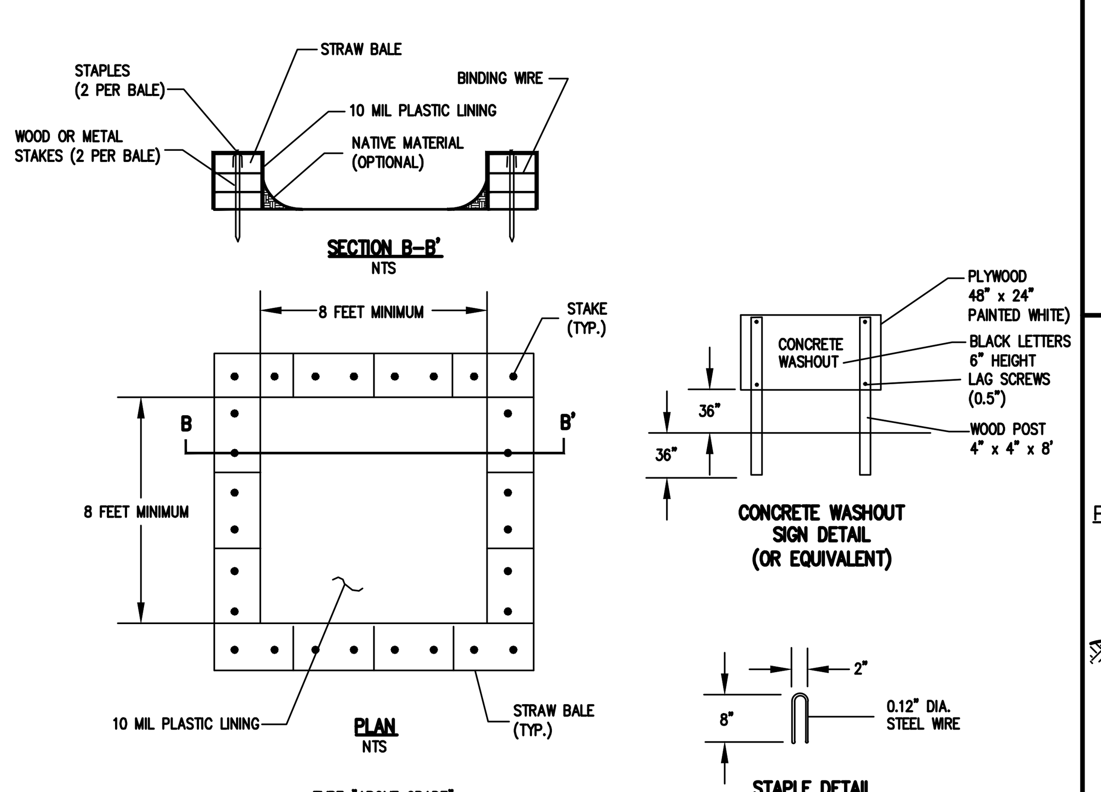

NOTES:

1. ACTUAL LAYOUT DETERMINED IN THE FIELD. LOCATE THE FACILITY A MINIMUM OF 100 FEET FROM DRAINAGE SWALES, STORM DRAIN INLETS, WETLANDS, STREAMS AND OTHER SURFACE WATERS.
2. THE MINIMUM SIZE SHALL BE 8 FEET BY 8 FEET AT THE BOTTOM AND 2 FEET DEEP. IF EXCAVATED, THE SIDE SLOPES SHALL BE 2 HORIZONTAL TO 1 VERTICAL.
3. WASHOUT STATION SHOULD BE CLEANED WHEN CONCRETE ACCUMULATES TO 75% OF THE STORAGE VOLUME. ANY EXCESS WASH WATER SHALL BE PUMPED INTO A CONTAINMENT VESSEL AND PROPERLY DISPOSED OF OFF SITE.
4. THE CONCRETE WASHOUT SIGN SHALL BE INSTALLED WITHIN 30' OF THE TEMPORARY CONCRETE WASHOUT FACILITY.
5. THE PLASTIC LINER SHALL BE REPLACED WHENEVER THE LINER IS TORN, PUNCTURED, OR THE WASHOUT IS EMPTIED.

CONCRETE WASHOUT DETAIL

N.T.S.

COPYRIGHT © 2024
BME Associates

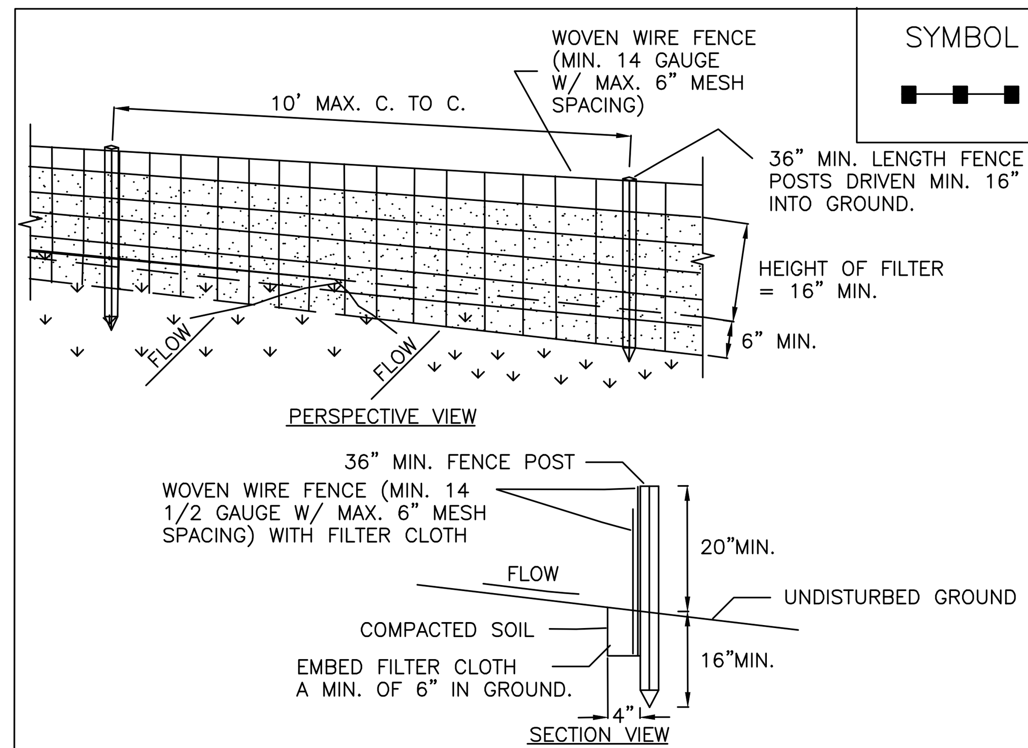

SYMBOL

CONSTRUCTION SPECIFICATIONS

1. WOVEN WIRE FENCE TO BE FASTENED SECURELY TO FENCE POSTS WITH WIRE TIES OR STAPLES. POSTS SHALL BE STEEL EITHER "T" OR "U" TYPE OR HARDWOOD.
2. FILTER CLOTH TO BE TO BE FASTENED SECURELY TO WOVEN WIRE FENCE WITH TIES SPACED EVERY 24" AT TOP AND MID SECTION. FENCE SHALL BE WOVEN WIRE, 6" MAXIMUM MESH OPENING.
3. WHEN TWO SECTIONS OF FILTER CLOTH ADJOIN EACH OTHER THEY SHALL BE OVER-LAPPED BY SIX INCHES AND FOLDED. FILTER CLOTH SHALL BE EITHER FILTER X, MIRAFI 100X, STABILINKA T140N, OR APPROVED EQUIVALENT.
4. PREFABRICATED UNITS SHALL BE GEOFAB, ENVIROFENCE, OR APPROVED EQUIVALENT.
5. MAINTENANCE SHALL BE PERFORMED AS NEEDED AND MATERIAL REMOVED WHEN "BULGES" DEVELOP IN THE SILT FENCE.

ADAPTED FROM DETAILS PROVIDED BY: USDA - NRCS, NEW YORK STATE DEPARTMENT OF TRANSPORTATION, NEW YORK STATE DEPARTMENT OF ENVIRONMENTAL CONSERVATION, NEW YORK STATE SOIL & WATER CONSERVATION COMMITTEE	SILT FENCE

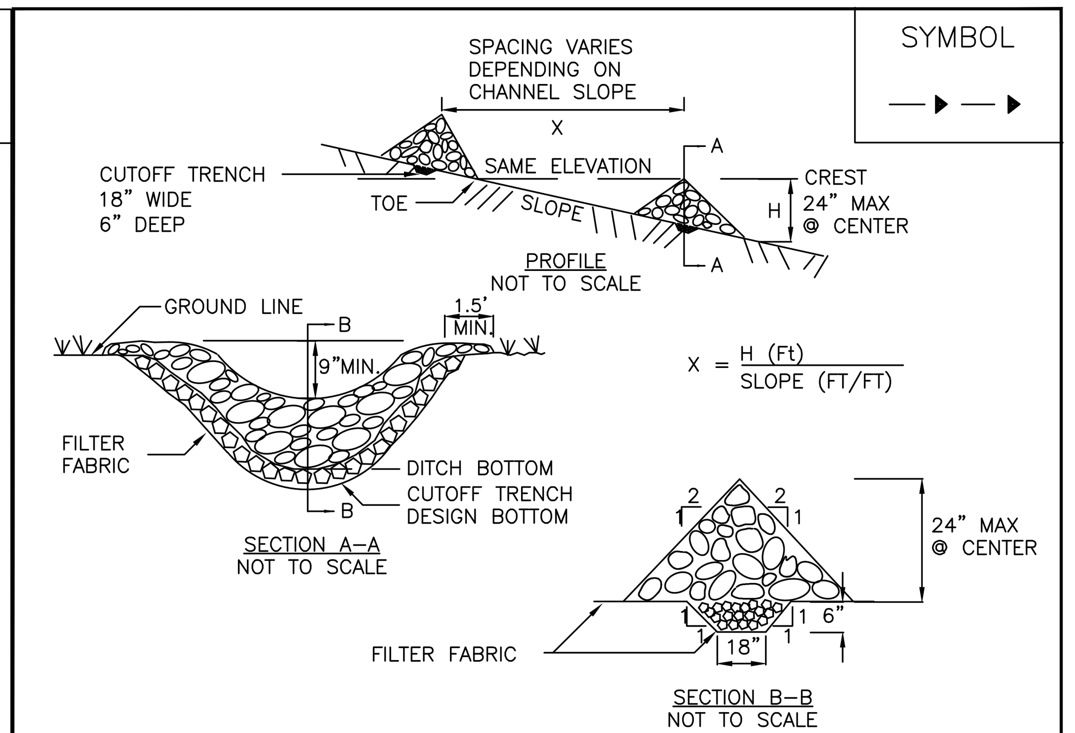

SYMBOL

CONSTRUCTION SPECIFICATIONS

1. STONE WILL BE PLACED ON A FILTER FABRIC FOUNDATION TO THE LINES, GRADES AND LOCATIONS SHOWN IN THE PLAN.
2. SET SPACING OF CHECK DAMS TO ASSUME THAT THE ELEVATIONS OF THE CREST OF THE DOWNSTREAM DAM IS AT THE SAME ELEVATION OF THE TOE OF THE UPSTREAM DAM.
3. EXTEND THE STONE A MINIMUM OF 1.5 FEET BEYOND THE DITCH BANKS TO PREVENT CUTTING AROUND THE DAM.
4. PROTECT THE CHANNEL DOWNSTREAM OF THE LOWEST CHECK DAM FROM SCOUR AND EROSION WITH STONE OR LINER AS APPROPRIATE.
5. ENSURE THAT CHANNEL APPURTENANCES SUCH AS CULVERT ENTRANCES BELOW CHECK DAMS ARE NOT SUBJECT TO DAMAGE OR BLOCKAGE FROM DISPLACED STONE.

MAXIMUM DRAINAGE AREA 2 ACRES.

ADAPTED FROM DETAILS PROVIDED BY: USDA - NRCS, NEW YORK STATE DEPARTMENT OF TRANSPORTATION, NEW YORK STATE DEPARTMENT OF ENVIRONMENTAL CONSERVATION, NEW YORK STATE SOIL & WATER CONSERVATION COMMITTEE	STONE CHECK DAM

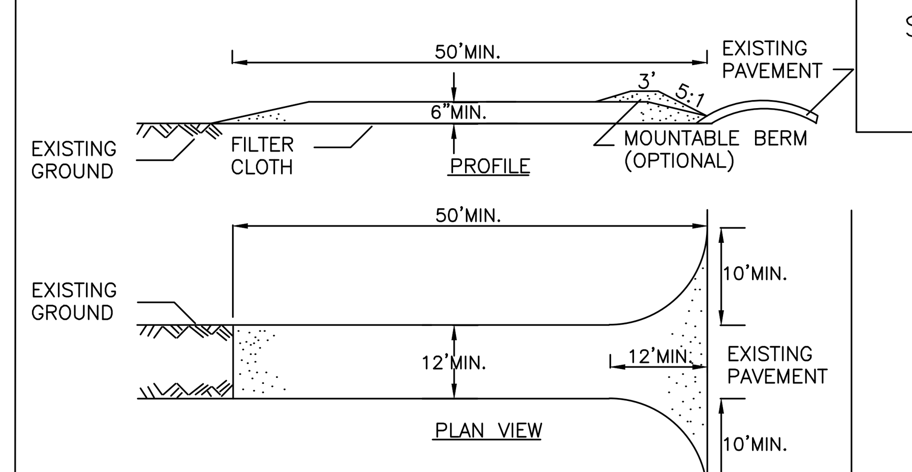

SYMBOL

CONSTRUCTION SPECIFICATIONS

1. STONE SIZE - USE 1-4 INCH STONE, OR RECLAIMED OR RECYCLED CONCRETE EQUIVALENT.
2. LENGTH - NOT LESS THAN 50 FEET (EXCEPT ON A SINGLE RESIDENCE LOT WHERE A 30 FOOT MINIMUM LENGTH WOULD APPLY).
3. THICKNESS - NOT LESS THAN SIX (6) INCHES.
4. WIDTH - TWELVE (12) FOOT MINIMUM, BUT NOT LESS THAN THE FULL WIDTH AT POINTS WHERE INGRESS OR EGRESS OCCURS. TWENTY-FOUR (24) FOOT IF SINGLE ENTRANCE TO SITE.
5. GEOTEXTILE - WILL BE PLACED OVER THE ENTIRE AREA PRIOR TO PLACING OF STONE.
6. SURFACE WATER - ALL SURFACE WATER FLOWING OR DIVERTED TOWARD CON-STRUCTION ACCESS SHALL BE PIPED BENEATH THE ENTRANCE. IF PIPING IS IMPRACTICAL, A MOUNTABLE BERM WITH 5:1 SLOPES WILL BE PERMITTED.
7. MAINTENANCE - THE ENTRANCE SHALL BE MAINTAINED IN A CONDITION WHICH WILL PREVENT TRACKING OR FLOWING OF SEDIMENT ONTO PUBLIC RIGHTS-OF-WAY, ALL SEDIMENT SPILLED, DROPPED, WASHED OR TRACKED ONTO PUBLIC RIGHTS-OF-WAY MUST BE REMOVED IMMEDIATELY.
8. WHEN WASHING IS REQUIRED, IT SHALL BE DONE ON A AREA STABILIZED WITH STONE AND WHICH DRAINS INTO AN APPROVED SEDIMENT TRAPPING DEVICE.
9. PERIODIC INSPECTION AND NEEDED MAINTENANCE SHALL BE PROVIDED AFTER EACH RAIN.

ADAPTED FROM DETAILS PROVIDED BY: USDA - NRCS, NEW YORK STATE DEPARTMENT OF TRANSPORTATION, NEW YORK STATE DEPARTMENT OF ENVIRONMENTAL CONSERVATION, NEW YORK STATE SOIL & WATER CONSERVATION COMMITTEE	STABILIZED CONSTRUCTION ACCESS

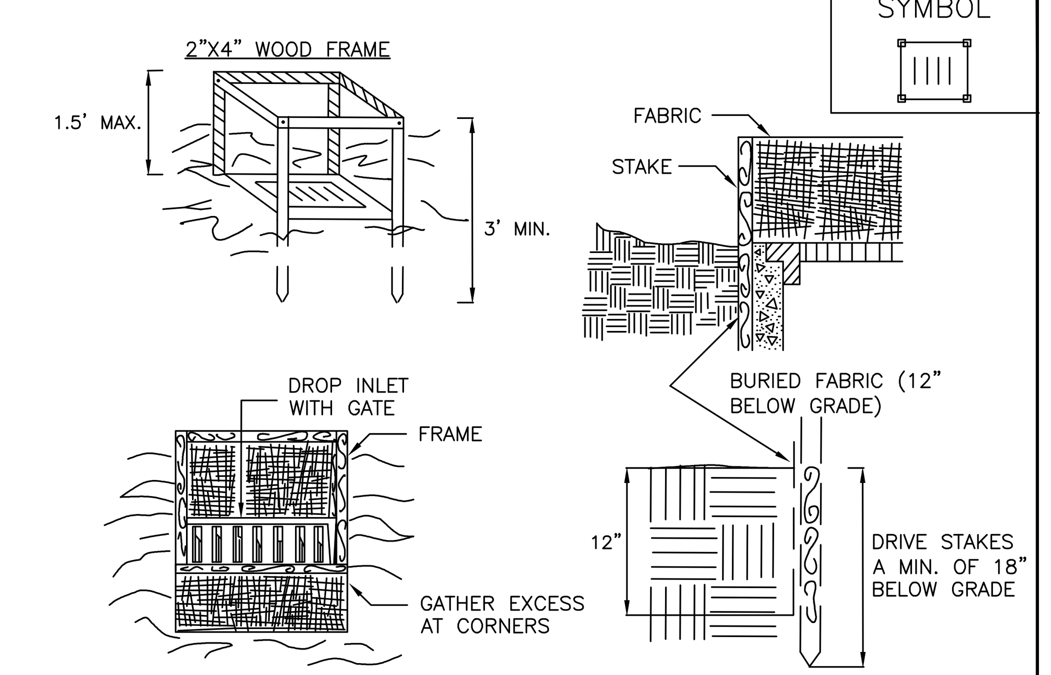

SYMBOL

CONSTRUCTION SPECIFICATIONS

1. FABRIC SHALL HAVE AN EOS OF 40-85. BURLAP MAY BE USED FOR SHORT TERM APPLICATIONS.
2. CUT FABRIC FROM A CONTINUOUS ROLL TO ELIMINATE JOINTS. IF JOINTS ARE NEEDED THEY WILL BE OVERLAPPED TO THE NEXT STAKE.
3. STAKE MATERIALS WILL BE STANDARD 2" x 4" WOOD OR EQUIVALENT. METAL WITH A MINIMUM LENGTH OF 3 FEET.
4. SPACE STAKES EVENLY AROUND INLET 3 FEET APART AND DRIVE A MINIMUM 18 INCHES DEEP. SPANS GREATER THAN 3 FEET MAY BE BRIDGED WITH THE USE OF WIRE MESH BEHIND THE FILTER FABRIC FOR SUPPORT.
5. FABRIC SHALL BE EMBEDDED 1 FOOT MINIMUM BELOW GROUND AND BACKFILLED. IT SHALL BE SECURELY FASTENED TO THE STAKES AND FRAME.
6. A 2" x 4" WOOD FRAME SHALL BE COMPLETED AROUND THE CREST OF THE FABRIC FOR OVER FLOW STABILITY.

MAXIMUM DRAINAGE AREA 1 ACRE

ADAPTED FROM DETAILS PROVIDED BY: USDA - NRCS, NEW YORK STATE DEPARTMENT OF TRANSPORTATION, NEW YORK STATE DEPARTMENT OF ENVIRONMENTAL CONSERVATION, NEW YORK STATE SOIL & WATER CONSERVATION COMMITTEE	FABRIC DROP INLET PROTECTION

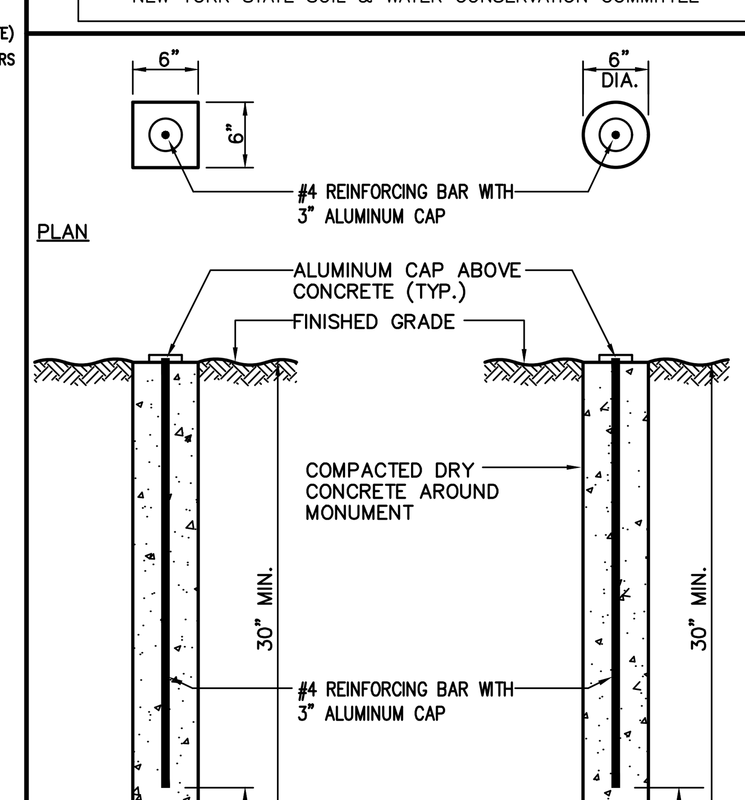

MONUMENT

(N.T.S.)

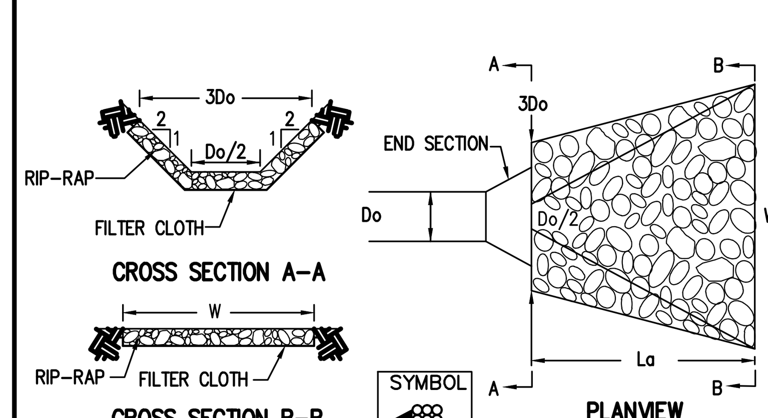

RIP-RAP OUTLET DIMENSIONS

DESIGNATION	DIA. OF PIPE Do	3Do	La	W
D	18"	4.5'	8'	9.5'

RIP-RAP OUTLET PROTECTION DETAIL TYPICAL

NTS

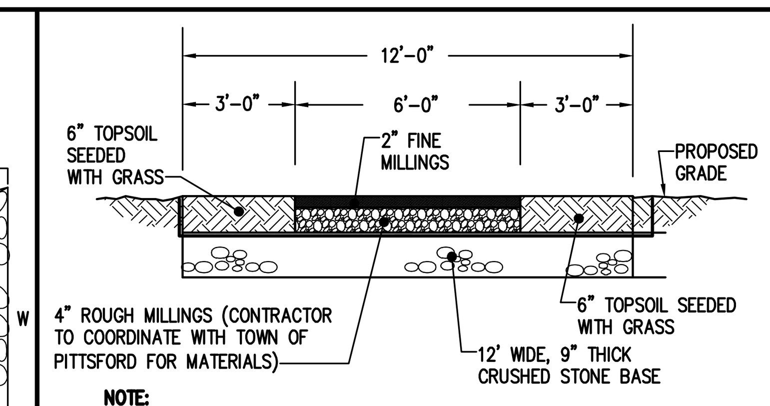

NOTE:
LOCATION OF 6' MILLINGS SECTION WITHIN DRIVEWAY MAY VARY (SEE PLANS).

EAST MAINTENANCE DRIVE/TRAIL DETAIL

N.T.S.

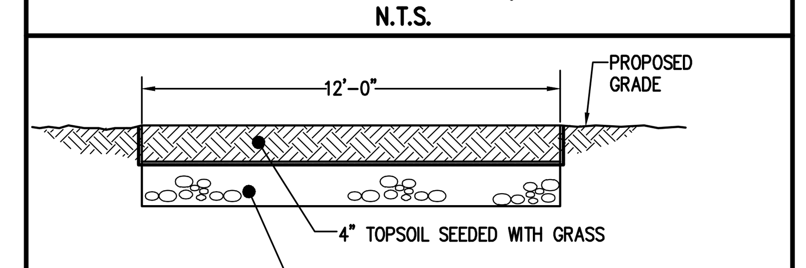

POND ACCESS DRIVE DETAIL

N.T.S.

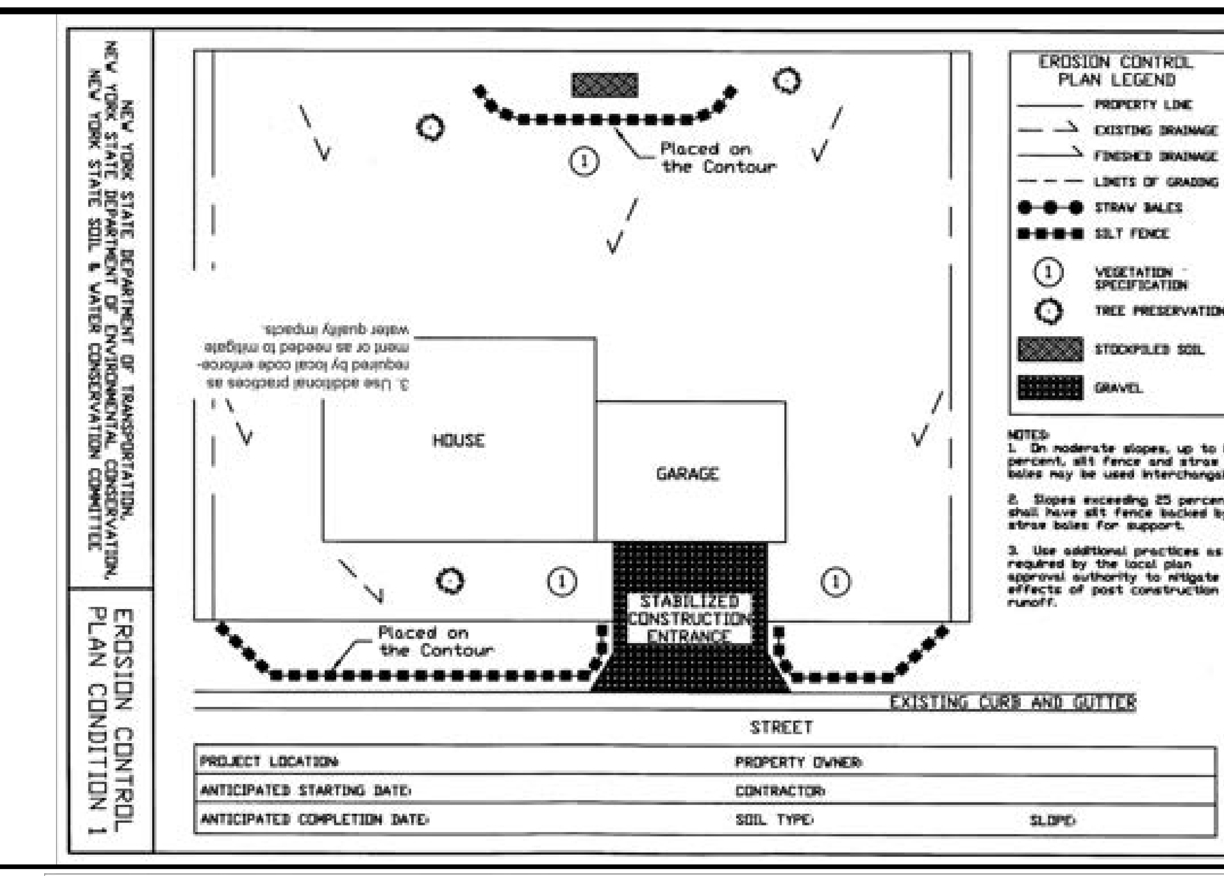

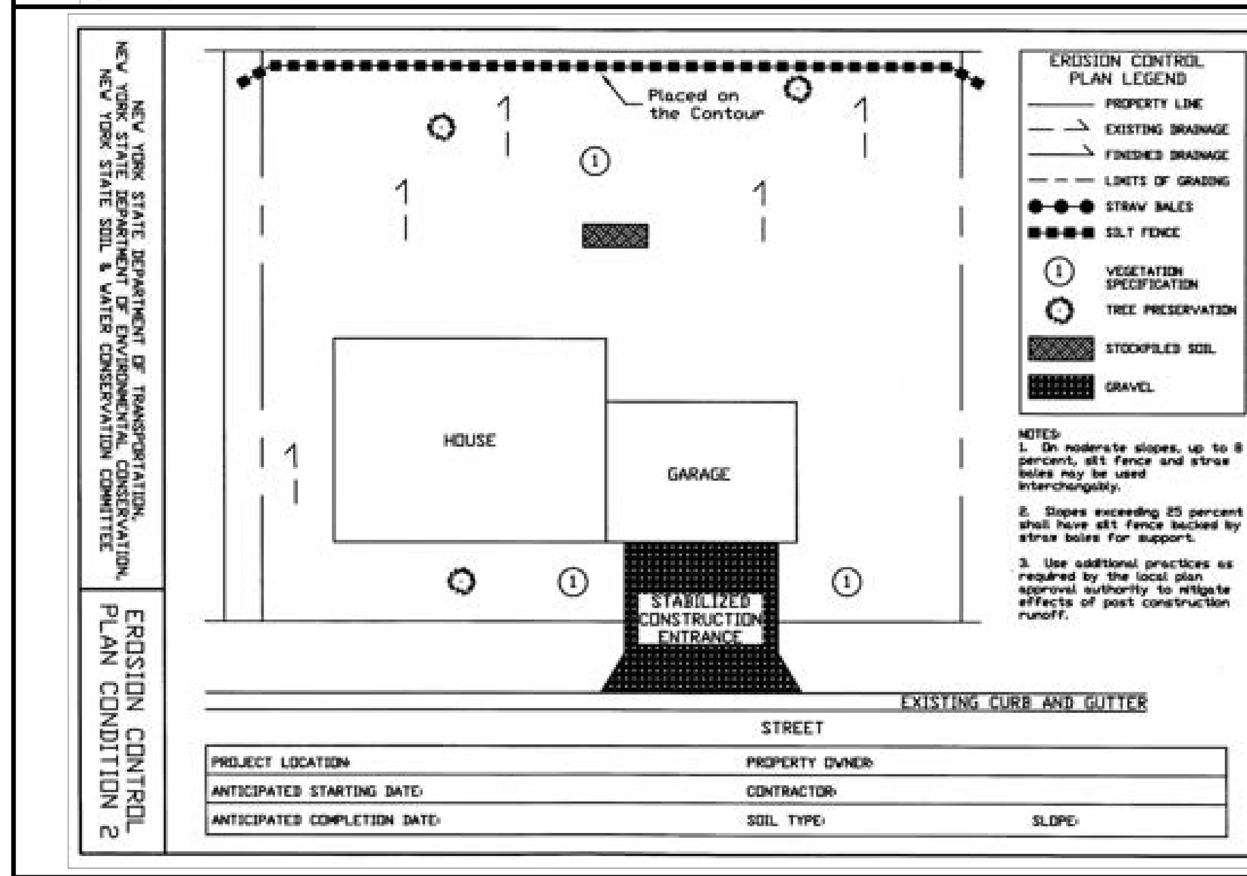

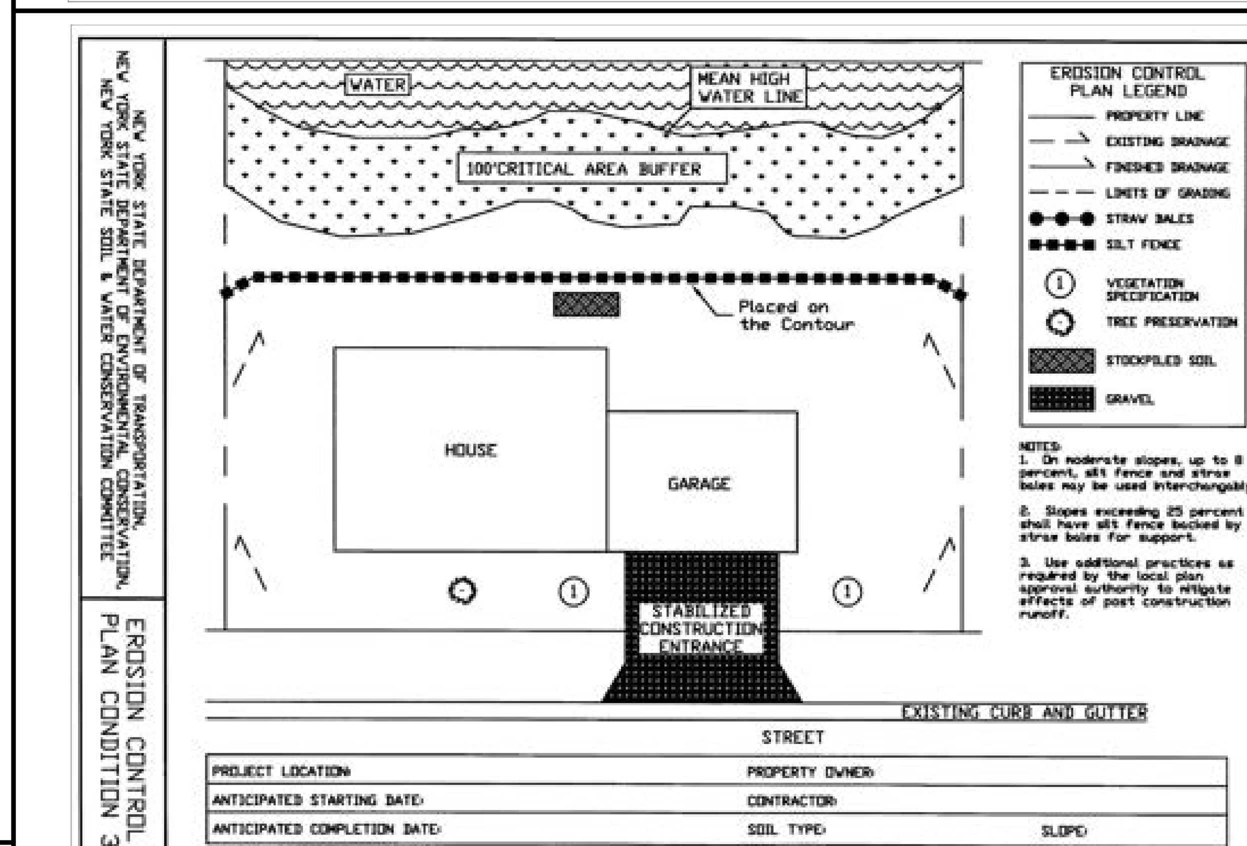

NOTE:
SOAK BARE ROOT PLANT IN WATER 2 HOURS BEFORE PLANTING IF DRY. WORK TOPSOIL AROUND ROOTS BY HAND. WATER THOROUGHLY UNTIL BACKFILL SOIL IS COMPLETELY SATURATED.

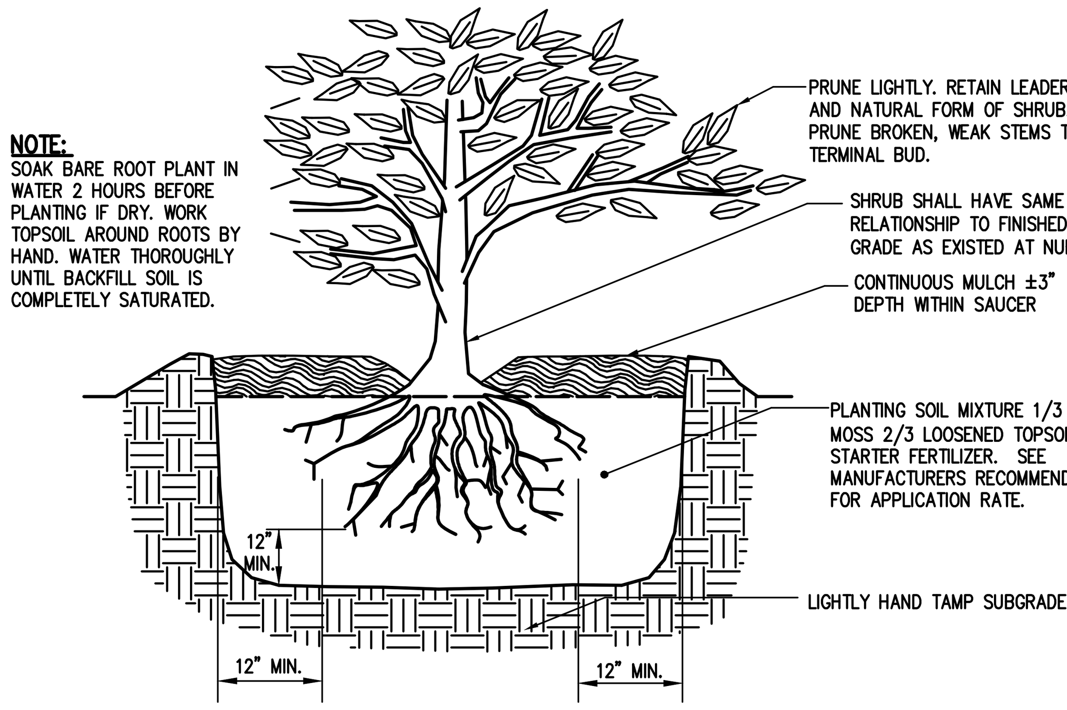

BARE ROOT SHRUB PLANTING DETAIL

N.T.S.

NOT APPROVED

This plan has not received final approval of all reviewing agencies. This plan is subject to revisions until all approvals are obtained and should not be used for construction purposes.

Drawing Alteration
The following is an excerpt from the New York State Education Law Article 145 Section 7209 and applies to this drawing:
"It is a violation of this law for any person, unless he is acting under the direction of a licensed professional engineer or land surveyor to alter any item in any way. If an item bearing the seal of an engineer or land surveyor is altered, the altering engineer or land surveyor shall affix to the item his seal and the notation "altered by" followed by his signature and the date of such alteration, and a specific description of the alteration."

	REVISIONS	DATE	BY
7			
6			
5			
4			
3			
2	REVISED PER TOWN & AGENCY COMMENTS & GRADING	9/19/25	AND
1	REVISED PER TOWN & AGENCY COMMENTS	8/1/24	AND

BME ASSOCIATES
ENGINEERS • SURVEYORS • LANDSCAPE ARCHITECTS
10 LIFT BRIDGE LANE EAST
FAIRPORT, NEW YORK 14450
WWW.BMEPC.COM
585-377-7360

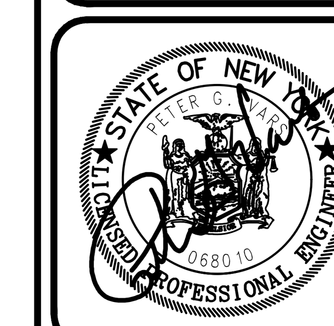

PROJECT: COVENTRY RIDGE SUBDIVISION SECTION 3
LOCATION: TOWN OF PITTSFORD, MONROE COUNTY, NEW YORK STATE
CLIENT: CLOVER STREET DEVELOPMENT CORPORATION, 30 GROVE STREET, PITTSFORD, NY 14534
DRAWING TITLE: FINAL DETAIL SHEET

PROJECT MANAGER	P. VARS
PROJECT ENGINEER	F. SHELLEY
DRAWN BY	A. D'ANGELO
SCALE	N.T.S.
DATE ISSUED	APRIL 3, 2024
PROJECT NO.	9502F
DRAWING NO.	11

P:\9502F\Drawings\Final\9502F Design Base.dwg

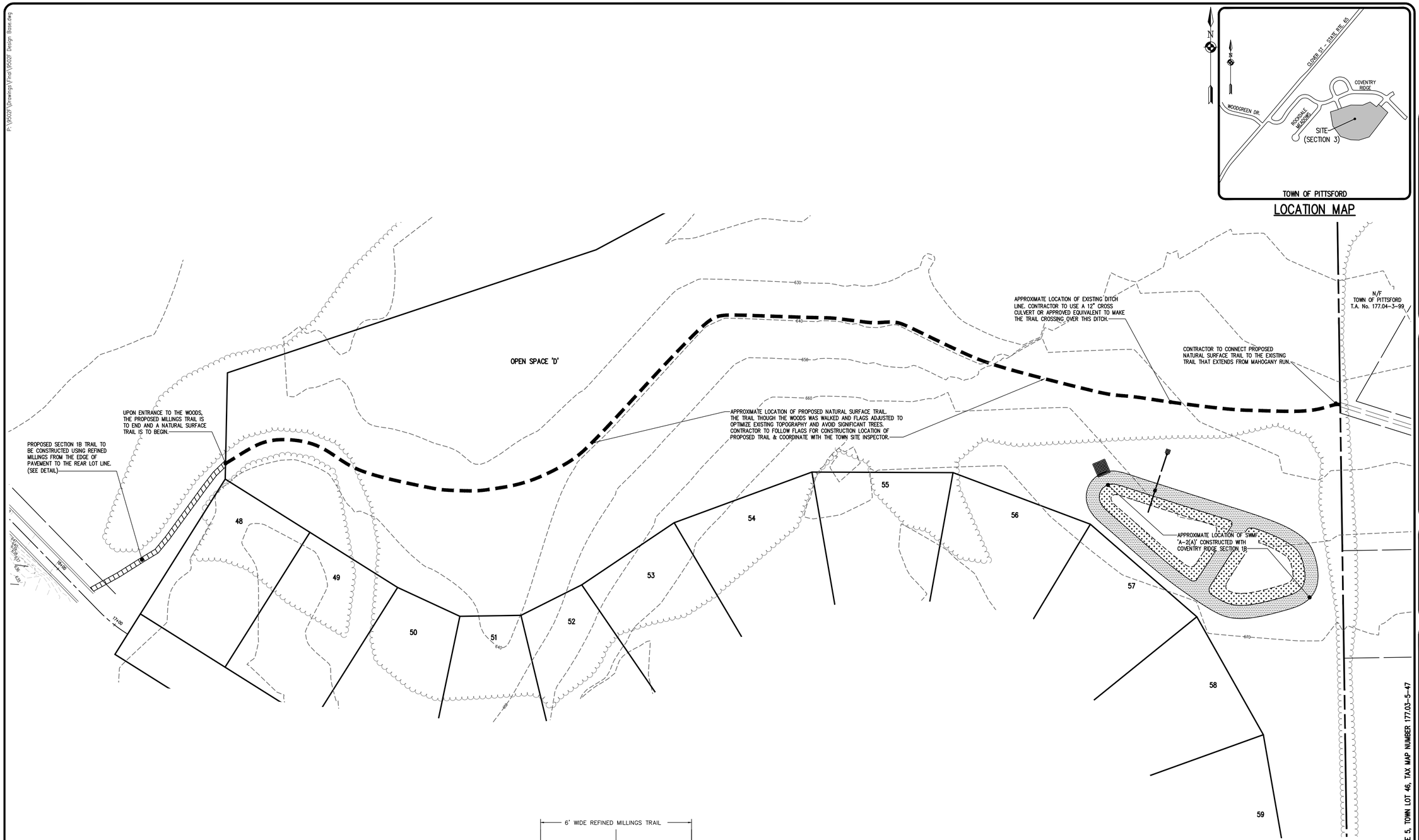

LOCATION MAP

Drawing Alteration
The following is an excerpt from the New York State Education Law Article 145 Section 7209 and applies to this drawing:
"It is a violation of this law for any person, unless he is acting under the direction of a licensed professional engineer or land surveyor to alter any item in any way. If an item bearing the seal of an engineer or land surveyor is altered, the altering engineer or land surveyor shall affix to the item his seal and the notation "altered by" followed by his signature and the date of such alteration, and a specific description of the alteration."

	REVISIONS	DATE	BY
7			
6			
5			
4			
3			
2			
1			

BME ASSOCIATES
ENGINEERS • SURVEYORS • LANDSCAPE ARCHITECTS
10 LIFT BRIDGE LANE EAST
FAIRPORT, NEW YORK 14450
WWW.BMEPC.COM
585-377-7360

STATE OF NEW YORK
FRANK A. SHELLEY
058610
LICENSED PROFESSIONAL ENGINEER

PROJECT: COVENTRY RIDGE SUBDIVISION
SECTION 3
LOCATION: TOWN OF PITTSFORD, MONROE COUNTY, NEW YORK STATE
CLIENT: CLOVER STREET DEVELOPMENT CORPORATION
30 GROVE STREET
PITTSFORD, NY 14534
DRAWING TITLE: FINAL
SECITON 1B TRAIL PLAN

PHELPS & GORHAM PURCHASE, TOWNSHIP 12, RANGE 5, TOWN LOT 46, TAX MAP NUMBER 177.03-5-47

PROJECT MANAGER	
P. VARS	
PROJECT ENGINEER	
F. SHELLEY	
DRAWN BY	
A. D'ANGELO	
SCALE	DATE ISSUED
1" = 60'	SEPTEMBER 19, 2025
PROJECT NO.	
9502F	
DRAWING NO.	
12	

LEGEND

	BOUNDARY LINE
	PROPOSED LOT LINE
	CENTERLINE
	APPROXIMATE LOCATION OF PROPOSED REFINED MILLINGS TRAIL
	APPROXIMATE LOCATION OF PROPOSED NATURAL SURFACE TRAIL
	APPROXIMATE LOCATION OF EXISTING TREE LINE
336	EXISTING CONTOUR W/ ELEVATION
336	PROPOSED CONTOUR W/ ELEVATION
336x5	PROPOSED SPOT ELEVATION
FG = 336.0	PROPOSED FINISHED GRADE

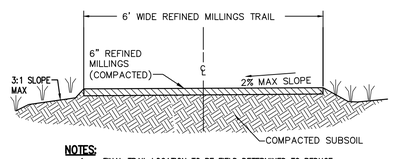

NOTES:
1. FINAL TRAIL LOCATION TO BE FIELD DETERMINED TO REDUCE TREE CLEARING AND GROUND DISTURBANCE
2. TRAIL TO BE GRADED TO 3" ABOVE EXISTING ADJACENT GRADE.
3. PROVIDE AN 8" SDR-35 CULVERT WITH INVERT 12" BELOW TOP OF TRAIL AT 1% MINIMUM SLOPE AT LOW POINTS IN TRAIL. CULVERTS TO DAYLIGHT TO EXISTING GRADE
4. TRAIL SURFACE TO BE INSTALLED APPROXIMATELY 3" ABOVE ADJACENT GRADE

TYPICAL REFINED MILLINGS TRAIL

NTS

GRAPHIC SCALE
60 0 30 60 120
(IN FEET)
1 inch = 60 ft.

NOT APPROVED

This plan has not received final approval of all reviewing agencies. This plan is subject to revisions until all approvals are obtained and should not be used for construction purposes.

APPROVALS

BY: _____ DATE: _____
TOWN ENGINEER

BY: _____ DATE: _____
COMMISSIONER OF PUBLIC WORKS

BY: _____ DATE: _____
CHAIRMAN OF THE PLANNING BOARD

COPYRIGHT © 2024
BME Associates

October 27, 2025

TOWN OF PITTSFORD
PLANNING BOARD
RESOLUTION
Clover Street Development Corp.
Coventry Ridge Subdivision – Section 3
Final Subdivision
Tax Parcel #177.04-03-5-47

WHEREAS BME Associates, as agent for Clover Street Development Corp., has made application for Final Subdivision approval with application materials received on September 19, 2025, for a 16-lot subdivision section with a dedicated road as part of the Coventry Ridge Subdivision, on 10.52 +/- acres; and

WHEREAS, the Town Board, as part of an Incentive Zoning application for this subdivision, issued a negative declaration pursuant to SEQRA on June 2, 1998; and

WHEREAS, the Planning Board, as part of the Concept Subdivision application for this subdivision, issued a negative declaration pursuant to SEQRA on February 8, 1999; and

WHEREAS, a Preliminary Subdivision approval was granted on August 26, 2024, and the Final Subdivision plans are consistent with the approved Preliminary Subdivision plans; and

NOW, THEREFORE, upon consideration by the Planning Board of all written and oral submissions and testimony by the applicant, appropriate agencies, and the public, and the Planning Board having given this matter due deliberation and consideration; it is

RESOLVED, that the Planning Board of the Town of Pittsford grants Final Subdivision approval based upon the following Findings of Fact and subject to compliance with the following Conditions of Approval:

FINDINGS OF FACT

1. This application is substantially consistent with the revised Concept Subdivision approval granted on July 22, 2013, and the Preliminary Subdivision approval granted on August 26, 2024. The conditions placed on the Concept Subdivision and Preliminary Subdivision approvals that fall outside of this approval remain in effect.

2. This section, to be referred to as “Section 3,” originally included 15 lots. One lot has been transferred from Section 4 to Section 3, giving this section a total of 16 lots.

3. This project occurs within 500 feet of land in agricultural production in Monroe County’s Eastern Agricultural District. An Agricultural Data Statement was completed on December 11, 2012, for this project as required in Section 283-a of Town Law and Article 25AA of the New York State Agriculture and Markets Law.

4. Under the current General Permit (GP-0-25-001), a site with coverage under a previous permit is permitted to discharge stormwater in accordance with said previous permit requirements and post-construction technical/design components may be continued in use, provided the design was in accordance with the requirements at the time of initial authorization. Coventry Ridge Subdivision is covered under a previous General Permit, GP-0-20-001.

5. The overall concept plans for Coventry Ridge as well as plans for Section 1 of Coventry Ridge include a trail behind the lots of section 1-B connecting Coventry Ridge and the Autumn Woods

DRAFT

subdivision. This trail in an important connection between neighborhoods and Isaac Gordon Park that must be established.

CONDITIONS OF APPROVAL

1. Subject to compliance with or resolution to Town Review Engineer comments dated October 17, 2025, and attached hereto.

2. Please revise the Pond Access Detail on Sheet 11 to 12' wide and not 12" wide.

3. Sheet 11 instructs the contractor to coordinate with the Town of Pittsford for trail millings and materials. Please note that the Town does have free millings for use, but its availability is subject to ongoing Town projects.

4. The absent trail on the north side of Section 1-B has been outlined in coordination with Town Staff and shall be constructed as part of the site work for Section 3.

5. The landscaping plan from Section 2 includes plantings to the rear of the lots on Cherry Hills Drive and are included in Section 3 plans. These plantings must be installed as part of the site work for Section 3.

6. The Town of Pittsford Sewer Department should be contacted for applicable sanitary sewer entrance and connection fees for the 16 lots. Entrance fees are collected at the time of Sewer Department Final Subdivision plan signature.

7. Vegetation clearing limits shall be staked/flagged and discussed with Town staff prior to any clearing.

8. Please submit easement descriptions and maps for the sanitary and storm sewers for review. Please submit a deed for the dedicated road.

9. A letter addressing Town Review Engineer comments and the Conditions of Approval shall be submitted with revised plans for Planning Board signature.

The within Resolution was motioned by Planning Board Member , seconded by Planning Board Member , and voted upon by members of the Planning Board as follows:

Paul Alguire
David Jefferson
Paula Liebschutz
Hali Buckley
Kevin Morabito
John Halldow
John Limbeck

Adopted by the Planning Board on October 27, 2025.

_____
April Zurowski
Planning Assistant

DRAFT

MRB Group

Elevating Communities

October 17, 2025

Mr. Doug DeRue, Planning and Zoning Department
Town of Pittsford
11 South Main Street
Pittsford, New York 14534

Re: Coventry Ridge, Section 3 Plan Review Comments
Final Site Plan
MRB Group Project No. 1660.12001.000

Dear Doug:

We've completed a review of the site plan for the proposed 16 lot subdivision at Coventry Ridge, Section 3. A Development Review Committee (DRC) meeting was held on October 14th, and we offer the following comments for the Town to consider in the preparation of the DRC Report.

1. The sanitary lateral for lot number 98 should be realigned to connect to the existing sewer main aligned down the side lot, as opposed to the current planned connection. The image below further details this change:

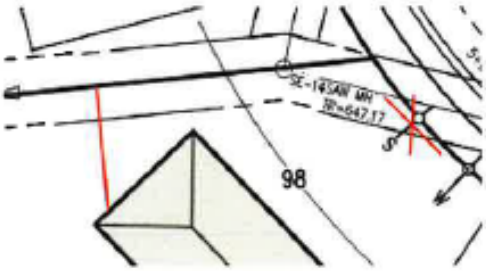

2. The sanitary lateral for lot 106 should be realigned to connect to the existing sewer main at a 90-degree angle. The image below further details this change:

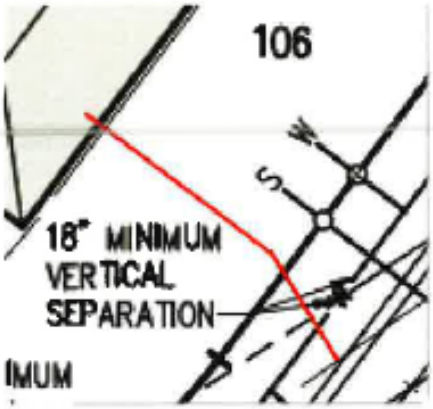

3. To provide symmetrical lots within the proposed subdivision, please reconfigure the proposed property line between Lot 98 and 99. The image below further details this change:

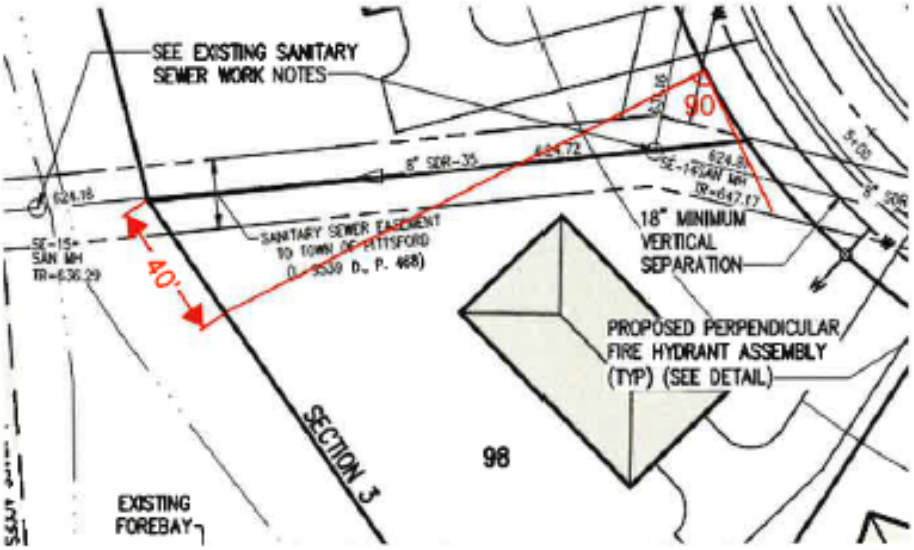

4. The current plan proposes an approximate 15' long, outside drop connection to the existing 4' diameter MH SE-10. The existing MH is approximately 24' deep, and there are concerns with a deep excavation along the side of this manhole, and the installation of an outside drop connection on the existing eastern MH stub, which is not aligned in the correct direction. Instead, it is recommended that the sanitary sewer aligned from MH S-10.2 be installed to a proposed 5' diameter inside drop manhole placed on the existing 8" sewer that is aligned between existing manholes SE-9 and SE-10. The sewer line from S-10.1 to S-10.2 will also need to be shifted southeasterly to provide a minimum 10 ft parallel offset from the storm sewer. Under this change, the existing sanitary sewer work note for MH SE-10 will need to be altered to simply describe the plugging of the existing eastern pipe stub, repair of the interior bench, along with the planned MH rim height change. A new note should be provided describing the bypass pumping and use of slip couplings associated with the installation of the new manhole S-10.1 on the existing sewer main. Also, under this change, the profiles will need to be edited accordingly, and the detail for an outside drop manhole can be removed from the drawings. The image below further details this change:

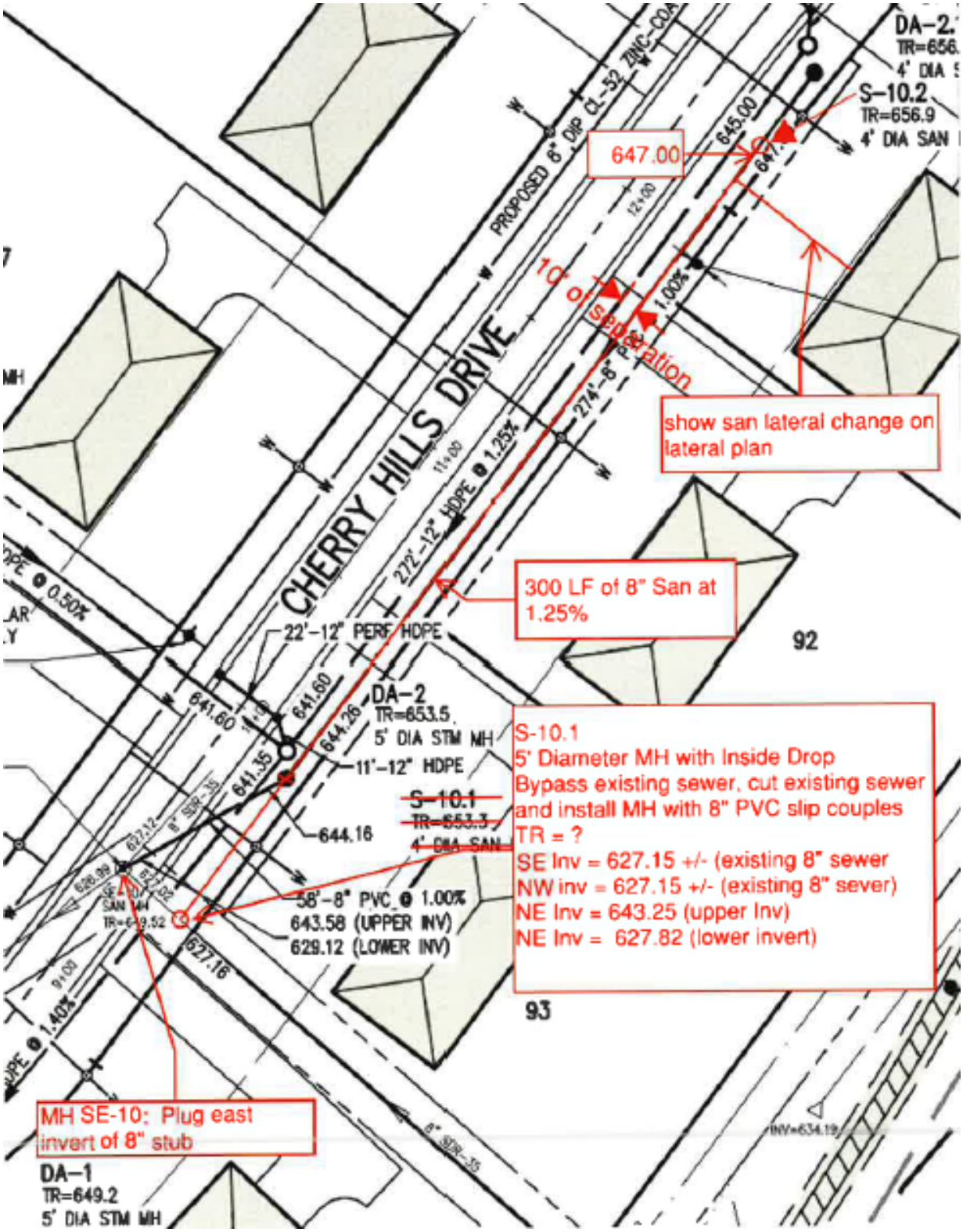
DA-2
TR=656.
4' DIA S
S-10.2
TR=656.9
4' DIA SAN
647.00
645.00
PROPOSED 6" DIP CL-52 ZINC-COA
12+00
10' of separation
1.00%
274'-8" PVC
show san lateral change on lateral plan
CHERRY HILLS DRIVE
11+00
272'-12" HDPE @ 1.25%
300 LF of 8" San at 1.25%
0.50%
22'-12" PERF HDPE
92
641.60
641.60
DA-2
TR=653.5
5' DIA STM MH
644.26
11'-12" HDPE
641.35
S-10.1
TR=653.3
4' DIA SAN
644.16
S-10.1
5' Diameter MH with Inside Drop
Bypass existing sewer, cut existing sewer
and install MH with 8" PVC slip couples
TR = ?
SE Inv = 627.15 +/- (existing 8" sewer
NW inv = 627.15 +/- (existing 8" sever)
NE Inv = 643.25 (upper Inv)
NE Inv = 627.82 (lower invert)
627.12
8" SDR-35
626.89
627.02
SE DIA SAN MH
TR=629.52
58'-8" PVC @ 1.00%
643.58 (UPPER INV)
629.12 (LOWER INV)
627.16
9+00
1.40%
93
MH SE-10: Plug east invert of 8" stub
8" SDR-35
INV=634.19
DA-1
TR=649.2
5' DIA STM MH

5. Please add four additional ROW monuments for Cherry Hill Drive at the locations shown below:

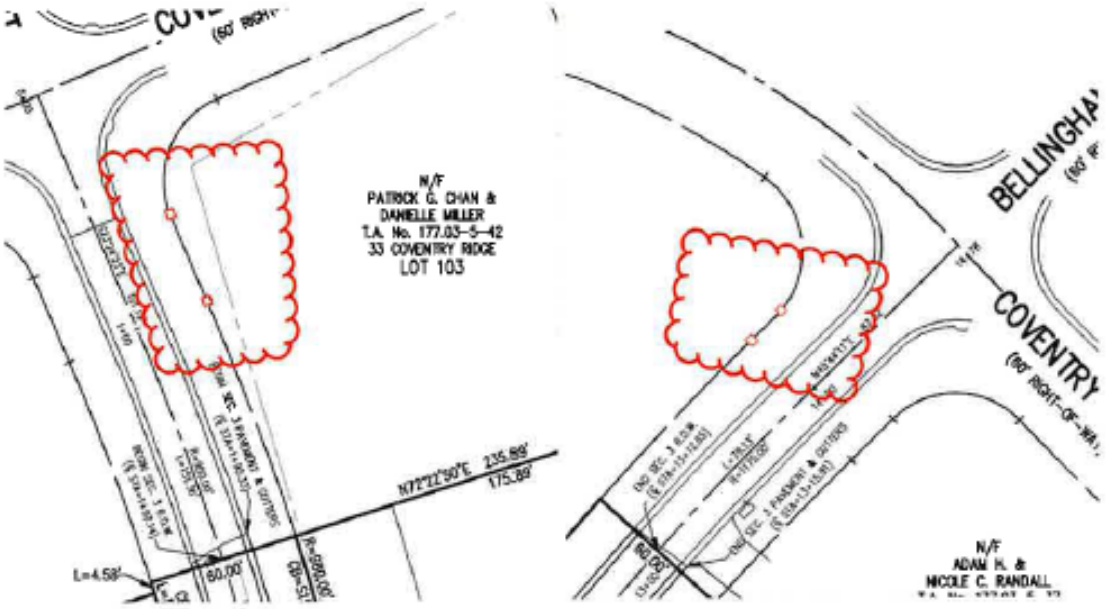

6. The provided engineering report states that the 100-year storm ponding elevation of the storm water facility is 637.79 ft, with a spillway crest elevation of 637.75 ft. The existing topography indicates the spillway currently has an elevation ranging from 636.0 to 637.4. To contain a 100-storm, the spillway should be elevated slightly above the 100-year ponding elevation. Additionally, the proposed grading plan notes the spill way to be graded to an elevation of 637.00 ft, but this is considerably below the design 100-year ponding elevation. Clarification/edit of the report and plans are needed regarding the proposed spillway elevation.

7. On the grading plan at the note provided for the existing spill way, please revise the words, "MAY BE" to state, "SHALL BE".

8. The driveway at Lot 94 is extremely flat and includes a graded swale across it. Please raise the FG elevation of the home from 651.5 to at least 652.5. This will help provide positive drainage away from the home and ensure a more defined common side yard swale between lots 93 and 94.

9. Please adjust the grades between Lot 97 and 98 to allow the common side yard swale to be centered over the adjusted property line.

Please feel free to contact our office with any comments or questions you may have in this regard.

Respectfully submitted,

David R. Willard
Senior Project Manager

TOWN OF PITTSFORD
PLANNING BOARD
SEPTEMBER 8, 2025

Minutes of the Town of Pittsford Planning Board meeting held on September 8, 2025, at 6:30PM local time. The meeting took place in the Lower-Level Meeting Room of Pittsford Town Hall, 11 S. Main Street.

PRESENT: Paul Alguire, John Limbeck, Dave Jefferson, Hali Buckley, Paula Liebschutz, Kevin Morabito

ABSENT: John Halldow

ALSO PRESENT: Doug DeRue, Director of Planning, Zoning, and Development; April Zurowski, Planning Assistant

ATTENDANCE: There were 10 members of the public present.

Chairman Halldow made a motion to call the meeting to order, seconded by Board Member Morabito. Following a unanimous voice vote, the meeting opened at 6:30PM, none opposed.

CONTINUED APPLICATION:

Passero Associates, Pittsford Oaks Apartments
Final Site Plan

Anthony Daniele, of 2851 Clover LLC, introduced the application. Mario Daniele, of 2851 Clover LLC; Jerry Goldman, of Woods Oviatt Gilman LLP; Shari Kleis, of Passero Associates; and Hans Lindenhovius, of Christa Construction; were also in attendance.

Mr. A. Daniele stated that he has received the draft resolution and understands that more work will need to be completed before Planning Board signatures. A demolition permit has been submitted and is currently under review. Demolition will take 3-4 weeks.

Board Member Buckley asked for the final number of units. Mr. A. Daniele stated that the final plans state 171 units.

Mr. Koegel stated that per the Town Code, the Design Review & Historic Preservation Board (DRHPB) has given formal recommendations to the Planning Board through their comments over the past few months. Mr. A. Daniele stated that he feels progress has been made with the DRHPB and fine details will still need to be worked out.

Chairman Halldow read the Final Site Plan resolution, which was approved.

NEW HEARINGS:

Marathon Engineering, 155 Golf Avenue (Monroe Golf Club)
Preliminary/Final Site Plan and Special Use Permit

Matt Tomlinson, of Marathon Engineering, introduced the application. Todd Longwell, of Monroe Golf Club, was also in attendance. The plan proposes relocation and expansion of the existing parking lot at Monroe Golf Club. Mr. Tomlinson stated that the new code has been reviewed and considered when possible. He stated that he has received and addressed the review engineer's comments and sees no issues. There will be no new lighting proposed. A landscaping cost estimate has been submitted for review.

Board Member Liebschutz stated that a few trees were removed further east on Golf Avenue near the maintenance building. She asked if those trees are part of the plan and if they will be replaced. Mr. Longwell stated that they are not part of this plan, but the Club plans to replace them with two evergreens.

Chairman Halldow motioned to open the public hearing, seconded by Board Member Jefferson. Following a unanimous voice vote, the hearing was opened.

Chairman Halldow invited members of the public to speak on this application. Hearing none, Chairman Halldow motioned to close the public hearing, seconded by Board Member Jefferson. Following a unanimous voice vote, the hearing was closed.

Chairman Halldow read the SEQRA and Preliminary/Final Site Plan resolutions, both of which were unanimously approved.

Sundown Designs NY LLC, 834 Linden Avenue (Universal Imports of Rochester)
Preliminary/Final Site Plan

Heinrich Fischer, of Sundown Designs NY LLC, introduced the application. Mark Fuerbacher, of Universal Imports of Rochester, was also in attendance. Mr. Fischer stated that the owners would like to expand the existing parking lot to the west side of the building. The new parking area will provide 14 spaces to be used as employee parking only. Additional landscaping is proposed on site.

Board Member Jefferson asked where snow storage is proposed on site. Mr. Fuerbacher stated that snow is removed from the site by a company located in East Rochester. Board Member Jefferson asked if the primary business conducted on site, is sales. Mr. Fuerbacher stated that the business is a mix of sales and service.

Mr. Fischer stated that some Development Review Committee (DRC) comments will need to be resolved. Ms. Zurowski suggested speaking with Anthony Caruso, the Town's Fire Marshal, and Rob Fromberger, the Town's Engineer, to resolve the comments.

Board Member Morabito motioned to open the public hearing, seconded by Board Member Liebschutz. Following a unanimous voice vote, the hearing was opened.

Chairman Halldow invited members of the public to speak on this application. Hearing none, Chairman Halldow stated that the hearing will remain open.

OTHER DISCUSSION:

The minutes of August 11, 2025, were approved following a motion by Board Member Alguire, seconded by Board Member Buckley. Following a unanimous vote, the minutes were approved, none opposed.

Chairman Halldow made a motion to appoint Board Member Alguire as the Vice Chairman of the Planning Board, seconded by Board Member Liebschutz; all ayes, none opposed.

Chairman Halldow motioned to close the meeting at 6:59PM, seconded by Board Member Morabito, and approved by a unanimous voice vote, none opposed.

Respectfully submitted,

_____

April Zurowski
Planning Assistant

OFFICIAL MINUTES ARE ON FILE IN THE OFFICE OF THE PLANNING DEPARTMENT

DRAFT