Design Review & Historic Preservation Board
Agenda
October 13, 2022

HISTORIC PRESERVATION DISCUSSION

BUILDING INSPECTOR REMARKS

APPLICATION FOR A CERTIFICATE OF APPROPRIATENESS

- **465 Marsh Road**
  The Applicant is requesting a Certificate of Appropriateness, pursuant to Code Section 185-196, for renovations as well as demolition and rebuild of side structure. This property is zoned (RN) Residential Neighborhood and is designated historic.

RESIDENTIAL APPLICATION FOR REVIEW

- **289 Tobin Road**
  The Applicant is requesting design review for the construction of a 1440 SF oversized over height accessory structure/Garage.

- **38 Old Farm Circle**
  The Applicant is requesting design review for the construction of a 180 SF pool pavilion.

- **4035 East Avenue**
  The Applicant is requesting design review for a 224 SF front porch encroaching into the front setback.

- **31 Falcon Trail**
  The Applicant is requesting design review for a 224SF unconditioned addition to rear of garage.

- **25 Whitestone Lane**
  The Applicant is requesting design review for the removal of the side entry to add 42 SF of pantry space to the kitchen.

- **4035 East Avenue**
  The Applicant is requesting design review for a 224 SF front porch encroaching into the front setback.

RESIDENTIAL APPLICATION FOR REVIEW – NEW HOMES

- **19 High Street**
  The Applicant is requesting design review for the construction of a one story single family home. The home will be approximately 2070 square feet including the garage.

- **45 & 47 Skylight Trail**
  The Applicant is requesting design review for the proposed construction of a new town home dwelling. The proposed building will consist of 2 attached single family dwellings sharing a common wall. Lot 26 (47 Skylight Trail) will be approximately 2023 sq. ft. and Lot 25 (45 Skylight Trail) will be 2010 sq. ft. The town homes will be located in the new Alpine Ridge development.

Design Review and Historic Preservation Board
Minutes
September 22, 2022

PRESENT
Dirk Schneider, Chairman, David Wigg, Vice Chairman; Jim Vekasy, Bonnie Salem

ALSO PRESENT
Robert Koegel, Town Attorney; Anthony Caruso, Building Inspector; Susan Donnelly, Secretary to the Board

ABSENT
Kathleen Cristman, John Mitchell, Paul Whitbeck

HISTORIC PRESERVATION DISCUSSION

Bonnie Salem reviewed with the Board her meeting with the Town communications director, Shelley O'Brien. They defined the purpose of the project as increasing the awareness of historic properties in the Town of Pittsford through the Town website. Ideas are being formulated regarding the use of maps and an interactive website to highlight these properties. Bonnie indicated she will continue to work with Shelley to develop a plan.

Dirk Schneider alerted Town staff to developments concerning the removal of siding at the Wright Home at Kilbourn Place. Anthony Caruso will follow up with Riedman to discuss their plans.

RESIDENTIAL APPLICATION FOR REVIEW - RETURNING

- **4 San Rafael Drive**
  The Applicant is requesting design review for the construction of a new single-family home. The home will be approximately 6703 SF of livable space and will be located on a vacant lot in the San Rafael Drive neighborhood.

  Dominick Caroselli, architect for the project, was present.

  Mr. Caroselli showed the Board previous plans and discussed the reasoning for adding the third bay garage. A second dormer will be added to the left elevation. He indicated that no materials have changed.

  David Wigg moved to accept as submitted provided the flashing be a copper material or concealed.

  Dirk Schneider seconded.

  All Ayes.

RESIDENTIAL APPLICATION FOR REVIEW

- **25 Trotters Field Run**
  The Applicant is requesting design review for the construction of an approximately 154 SF screen room addition off the front of the house.

  Scott Ingerick from Patio Solutions was present. The posts will be the same size as the porch, 6 x 6 wrapped with the same detailing. The roof shingles will all match and be carried across the roofing on the front elevation. Two French doors will allow access into the home through the living room. The porch will have white framing with black mesh.

Bonnie Salem moved to accept the application as submitted.

Dave Wigg seconded.

All Ayes.

- **27 Whitestone Lane**
  The Applicant is requesting design review for an approximate 70 SF covered porch over the front main entry of the home.

  The homeowner, Patrick Coakley, was present.

  The porch will be a pergola style over the front door. It will feature fiber wrapped posts. The walkway will be reconstructed.

  The Board suggested the applicant consider which shape columns will work best with the home but overall felt this is a good improvement to the home.

  David Wigg moved to accept the application as submitted.

  Dirk Schneider seconded.

  All Ayes.

RESIDENTIAL APPLICATION FOR REVIEW – NEW HOMES

- **7 Black Wood Circle**
  The Applicant is requesting design review for the construction of a one-story single-family home. The home will be approximately 2013 SF and will be located in the Wilshire Hills Subdivision.

  Jim Barbato of Pride Mark Homes was present.

  He indicated this design is consistent with other homes in the Wilshire development.

  The Board discussed the stone water table embellishment on the front elevation should be wrapped to the side elevations.

  Dirk Schneider moved to approve the application as submitted.

  Jim Vekasy seconded.

  All Ayes.

- **3 Stable View**
  The Applicant is requesting design review for the construction of a two-story single-family home. The home will be approximately 3256 SF.

  George Masi of Mascot Builders was present.

  The Board discussed their concerns regarding the multiple textures of materials proposed. It was determined to be acceptable if the color is consistent.

  The Board was also concerned about the lack of a corner board or stone return for the stone trim on the front elevation.

Dirk Schneider moved to accept the application as submitted with the condition that a corner board be added to the left of the front elevation and the half post at the porch on the garage side and return the cultured stone at the garage on both sides of the return with the recommendation that the colors of the materials be in the same color family.

Bonnie Salem seconded.

All Ayes.

- **45 & 47 Skylight Trail**
  The Applicant is requesting design review for the proposed construction of a new town home dwelling. The proposed building will consist of 2 attached single family dwellings sharing a common wall. Lot 26 (47 Skylight Trail) will be approximately 2023 SF. and Lot 25 (45 Skylight Trail) will be SF. The town homes will be in the Alpine Ridge development.

  This application was removed from the agenda at the request of the Applicant.

COMMERCIAL APPLICATION FOR REVIEW – SIGNAGE

- **3660 Monroe Avenue**
  The Applicant is requesting design review to replace existing a ground sign with a new 25 SF sign that is same size and same setback as existing sign.

  Frank Cleere from Skylight Signs was present.

  Mr. Cleere indicated the sign is being updated in response to a change in ownership. The sign will have an aluminum finish and illuminated internal lit letters.

  There was question as to whether Town Code allows for the illumination of the channel lit letters in this area of Monroe Avenue.

  Dirk Schneider moved to approve the design of the sign with the condition that the Town Code allows the illumination as proposed.

  David Wigg seconded.

  All Ayes.

DISCUSSION

David Wigg opened discussion regarding observations on siding materials at a development in Town. Town staff will look into this and report back to the Board.

REVIEW OF MINUTES OF SEPTEMBER 8, 2022, MEETING

Bonnie Salem moved to accept the minutes of the September 8, 2022, meeting as written.

David Wigg seconded.

All Ayes.

ADJOURNMENT

Dirk Schneider moved to close the meeting at 7:05 pm.

All Ayes.

Respectfully submitted,

Susan Donnelly
Secretary to the Design Review and Historic Preservation Board

Town of Pittsford

Department of Public Works
11 South Main Street
Pittsford, New York 14534

Phone: 585-248-6250
FAX: 585-248-6262

Permit #
CA22-000004

DESIGN REVIEW AND HISTORIC PRESERVATION BOARD
REFERRAL OF APPLICATION

Property Address: 465 Marsh Road PITTSFORD, NY 14534
Tax ID Number: 164.12-1-4
Zoning District: RN Residential Neighborhood
Owner: Robert Marshall
Applicant: Robert Marshall

Application Type:

- ☐ Residential Design Review §185-205 (B)
- ☐ Commercial Design Review §185-205 (B)
- ☐ Signage §185-205 (C)
- ☑ Certificate of Appropriateness §185-197
- ☐ Landmark Designation §185-195 (2)
- ☐ Informal Review
- ☐ Build to Line Adjustment §185-17 (B) (2)
- ☐ Building Height Above 30 Feet §185-17 (M)
- ☐ Corner Lot Orientation §185-17 (K) (3)
- ☐ Flag Lot Building Line Location §185-17 (L) (1) (c)
- ☐ Undeveloped Flag Lot Requirements §185-17 (L) (2)

Project Description: Applicant is requesting a Certificate of Appropriateness, pursuant to Code Section 185-196, for renovations as well as demolition and rebuild of side structure. This property is zoned (RN) Residential Neighborhood and is designated historic.

Meeting Date: October 13, 2022

TOWN OF PITTSFORD

Design Review & Historic Preservation Board
Application for Certificate of Appropriateness

Case # _____

1. Property Address: 465 MARSH ROAD

2. Tax Account Number: _____

3. Applicant's Name: ROBERT J. MARSHALL

   Address: 225 PINE VALLEY DRIVE (Street) Phone: 585-259-9796

   ROCHESTER NY 14626 (City / State / Zip Code) E-mail: INVESTINROCHESTER@YAHOO.COM

4. Applicant's Interest in Property:

   Owner: ☒ Lessee: ☐ Holding Purchase Offer: ☐

   Other *(explain)*: _____

5. Owner *(if other than above)*: _____

   Address: _____ (Street) Phone: _____

   _____ (City / State / Zip Code) E-mail: _____

   Has the Owner been contacted by the Applicant? Yes ☐ No ☐

6. Application prepared by: APPLICANT

   Address: _____ (Street) Phone: _____

   _____ (City / State / Zip Code) E-mail: _____

7. Project Design Professional *(if Available)*: _____

   Address: _____ (Street) Phone: _____

   _____ (City / State / Zip Code) E-mail: _____

8. Project Contractor *(if Available)*: NONE

Address: _____ Phone: _____

Street

_____ E-mail: _____

City *State* *Zip Code*

9. Present use of Property: SINGLE FAMILY HOME

10. Zoning District of Property: _____

11. Is the property located in a Town Designated Historic District?

Yes ☐ No ☑

12. Is the property listed on the National Registry of Historic Places?

Yes ☑ No ☐.

13. Will State or Federal Funding be used in this project, or will the project result in an application for Tax Credits or other State and Federal benefits?

Yes ☐ No ☑

If Yes, please explain:

14. Proposed Exterior Improvements:

A. Describe all exterior architectural improvements proposed with this project (include project materials and finishes; attach additional sheets if necessary):

-Paint. All paint colors and shades to remain the same. Brick to be red. All trim, exterior window parts, and all stone lintels over windows and doors are to remain white. The unpainted dedication plaque over the front door to remain unpainted.
-Doors to be reposition back to the original opening within the brick exterior wall. 2 panel 6 light craftsman style. Storm doors to be replaced with white steel security storm/screen door.
-Remove enclosed entry/porch. Rebuild transom window above door to match original front transom window.
-Relocate and restore horse stable from at house to North west part of property near well pump.

B. Describe all significant site improvements proposed with this project (include proposed changes in landscaping, significant plant material alterations, and other improvements associated with hardscape materials such as driveways and retaining walls; attach additional sheets if necessary):

-Front stoop to be removed, front and side entries to have 60" wide x 42" deep concrete stoops.
-Driveway to have black asphalt millings graded smooth with matching paths/sidewalks to entry stoops at front and side doors.
-Stone bordered planting area to be reclaimed, built up to grade level, mulched river rock stone, planted with wild flowers found at north section of property.
-Grade around entire house to be brought up and pitched away from house with topsoil and lawn.

15. If the structure is a Commercial Property open to the Public, please describe all interior improvements proposed at the project site (attach additional sheets if necessary).

16. Additional materials submitted with this application *(if available)*:

- ☑ Parcel map
- ☑ Photographs
- ☐ Other materials _____
- ☐ Architectural elevations
- ☐ Architectural plans

Applicant Certification:

I certify to the best of my knowledge that the information supplied on this application is complete and accurate.

_____ *Signature of applicant*

9/22/2022 *Date*

Owner Consent:

If the applicant is other than the owner, does the owner concur with this application?

Yes ☐ No ☐

If Yes, owner's signature: _____

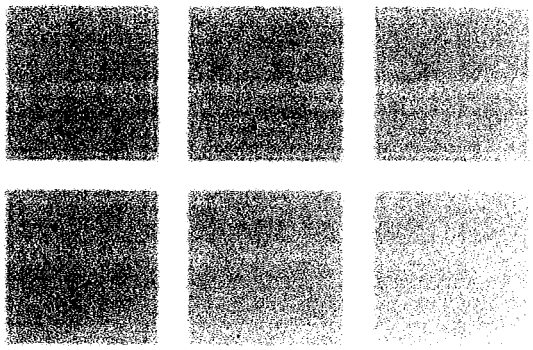

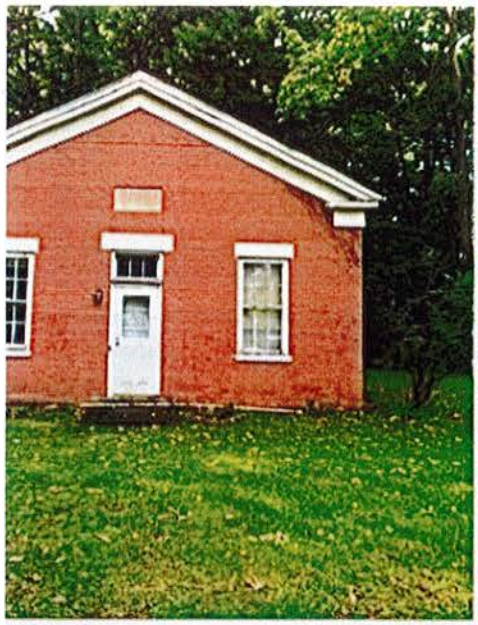
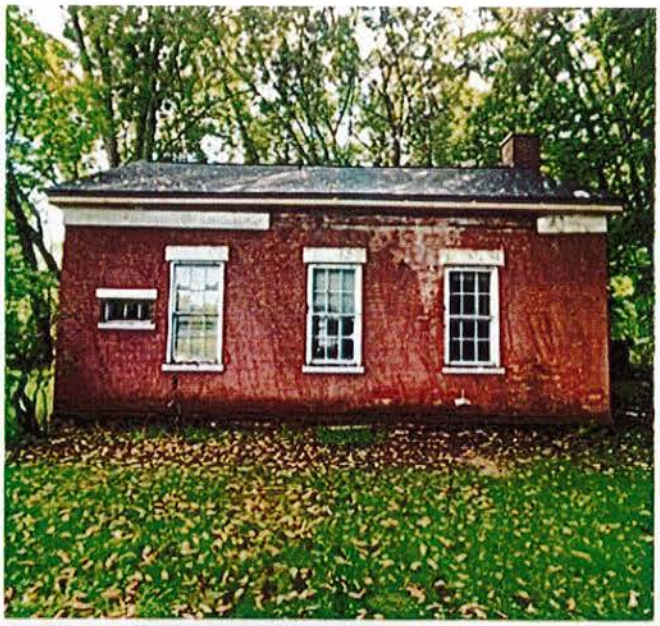
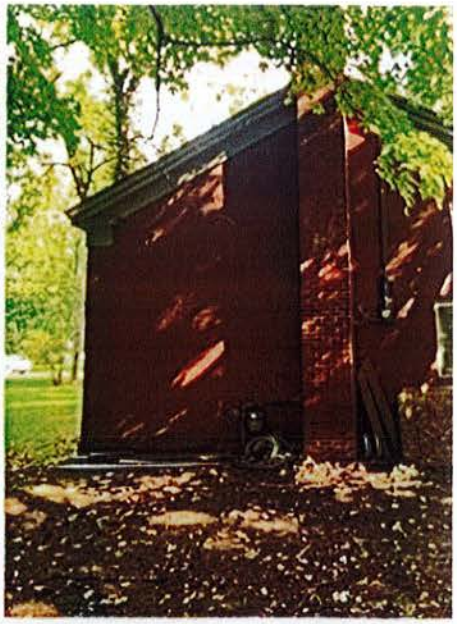




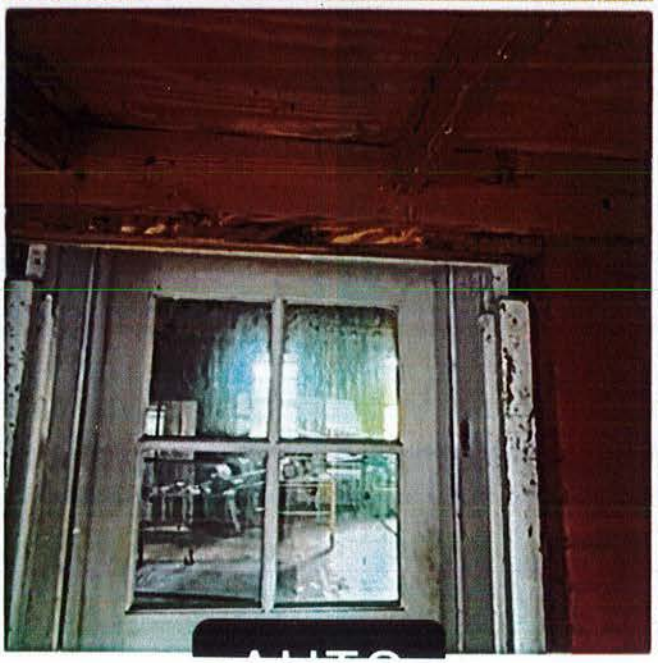


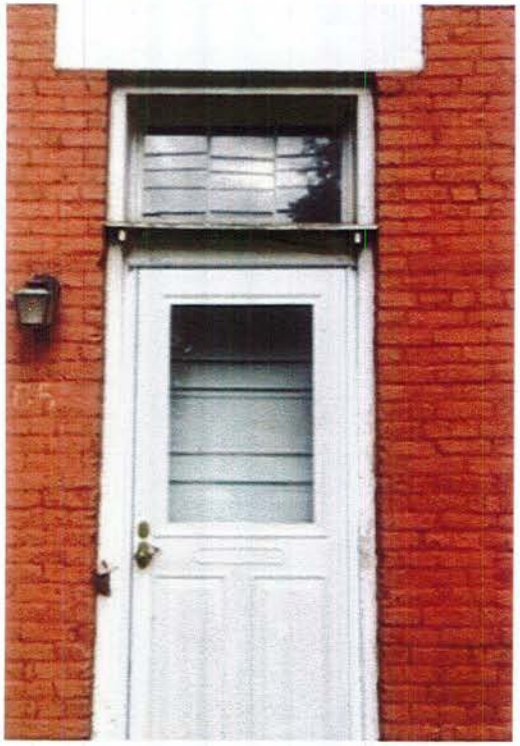

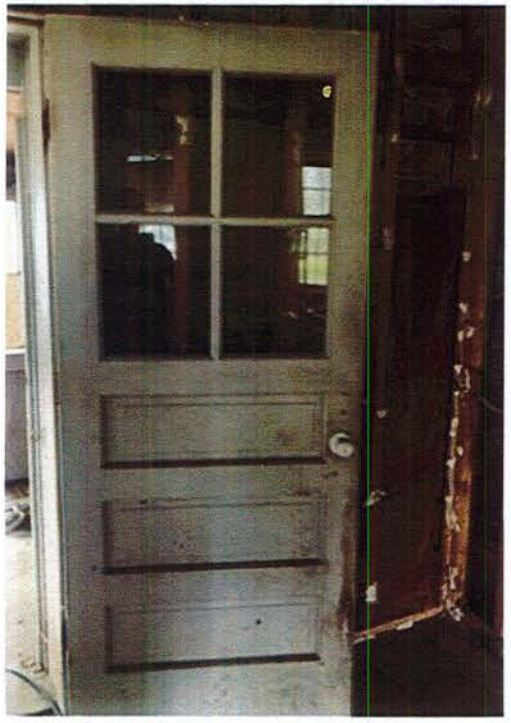



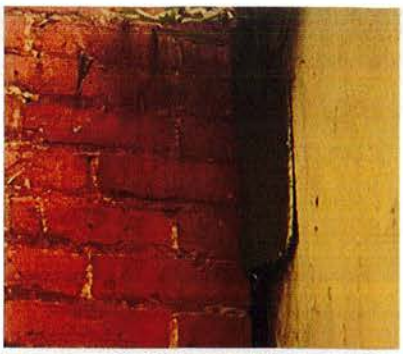


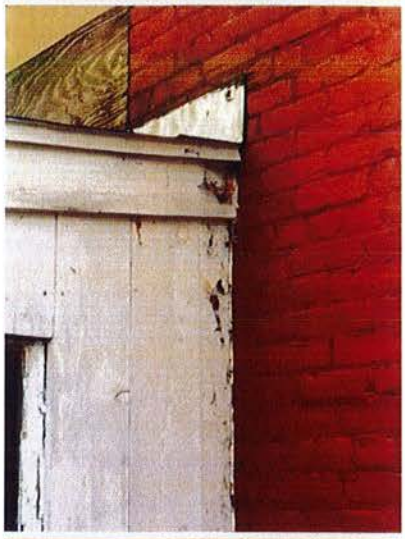





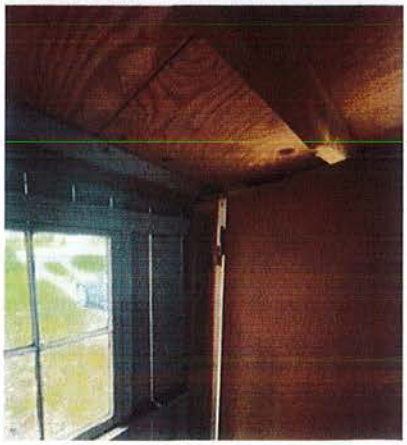

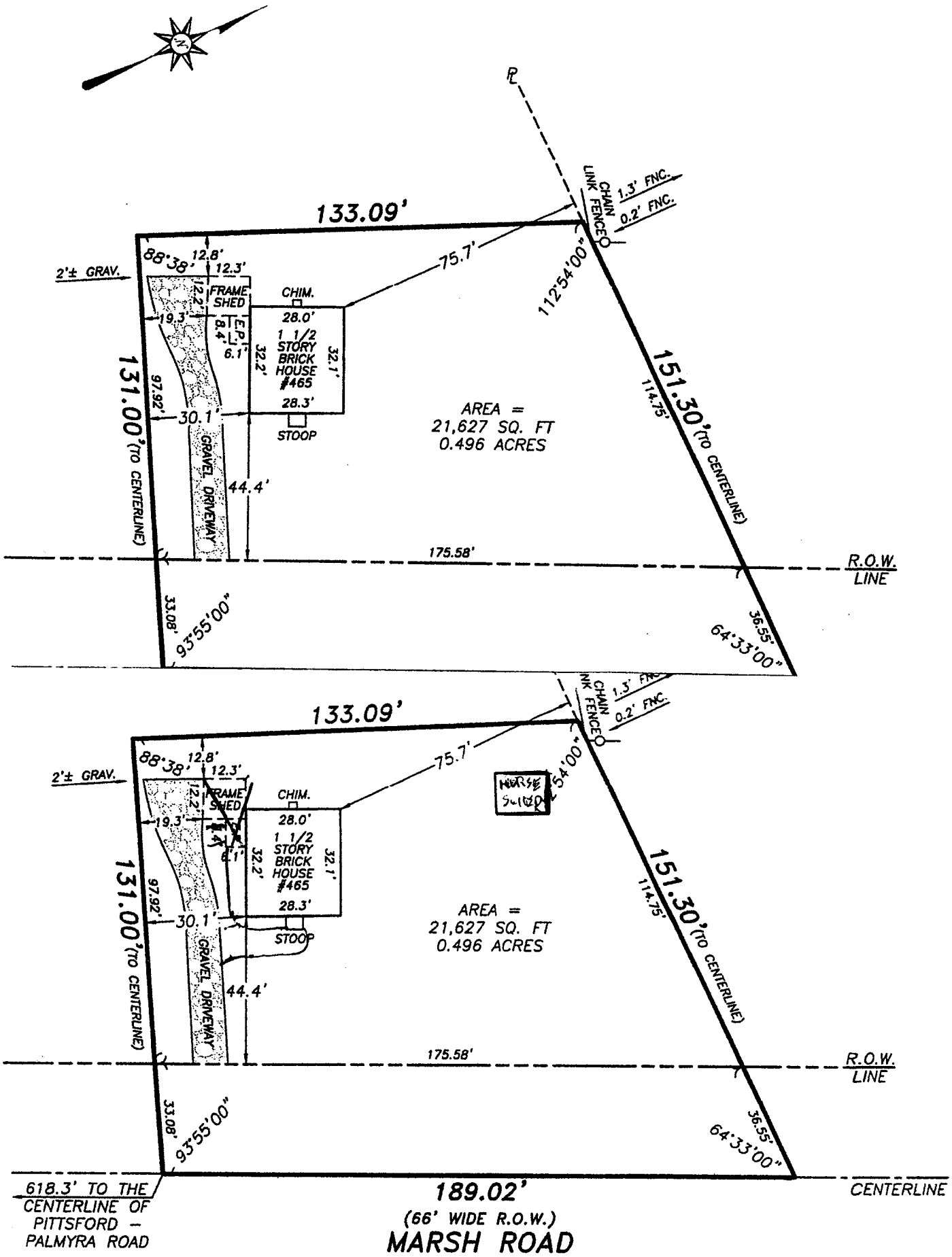
133.09'
75.7'
112°54'00"
CHAIN LINK FENCE
1.3' FNC.
0.2' FNC.
2'± GRAV.
88°38'
12.8'
12.3'
12.2'
FRAME SHED
CHIM.
28.0'
19.3'
8.4'
E.P.
6.1'
1 1/2 STORY BRICK HOUSE #465
32.2'
32.1'
28.3'
STOOP
97.92'
30.1'
131.00' (TO CENTERLINE)
GRAVEL DRIVEWAY
44.4'
AREA = 21,627 SQ. FT 0.496 ACRES
151.30' (TO CENTERLINE)
114.75'
175.58'
R.O.W. LINE
33.08'
93°55'00"
36.55'
64°33'00"
MARSH SHED
189.02'
(66' WIDE R.O.W.)
MARSH ROAD
618.3' TO THE CENTERLINE OF PITTSFORD – PALMYRA ROAD
CENTERLINE

TOWN OF PITTSFORD
DESIGN REVIEW & HISTORIC PRESERVATION BOARD MEETING
LEGAL NOTICE

Please take notice that the Town of Pittsford Design Review & Historic Preservation Board will hold the following Public Hearing on Thursday, October 13, 2022 in the Town Hall lower level meeting room, 11 South Main Street, beginning at 6:00 P.M. local time.

PUBLIC HEARING

- 465 Marsh Rd, Tax # 164.12-1-4 Applicant is requesting a Certificate of Appropriateness, pursuant to Code Section 185-196, for renovations as well as demolition and rebuild of side structure. This property is zoned (RN) Residential Neighborhood and is designated historic.

Anthony Caruso
Building Inspector

Town of Pittsford

Department of Public Works
11 South Main Street
Pittsford, New York 14534

Phone: 585-248-6250
FAX: 585-248-6262

Permit #
ZB22-000027

DESIGN REVIEW AND HISTORIC PRESERVATION BOARD
REFERRAL OF APPLICATION

Property Address: 289 Tobin Road HENRIETTA, NY 14467
Tax ID Number: 190.04-3-1.1
Zoning District: RRSP Rural Residential South Pittsford
Owner: Driver, Robin
Applicant: Driver, Robin

Application Type:

- [x] Residential Design Review §185-205 (B)
- [ ] Commercial Design Review §185-205 (B)
- [ ] Signage §185-205 (C)
- [ ] Certificate of Appropriateness §185-197
- [ ] Landmark Designation §185-195 (2)
- [ ] Informal Review
- [ ] Build to Line Adjustment §185-17 (B) (2)
- [ ] Building Height Above 30 Feet §185-17 (M)
- [ ] Corner Lot Orientation §185-17 (K) (3)
- [ ] Flag Lot Building Line Location §185-17 (L) (1) (c)
- [ ] Undeveloped Flag Lot Requirements §185-17 (L) (2)

Project Description: Applicant is requesting design review for the construction of a 1440 SF oversized overheight accessory structure/Garage.

Meeting Date: October 13, 2022

RN Residential Neighborhood Zoning

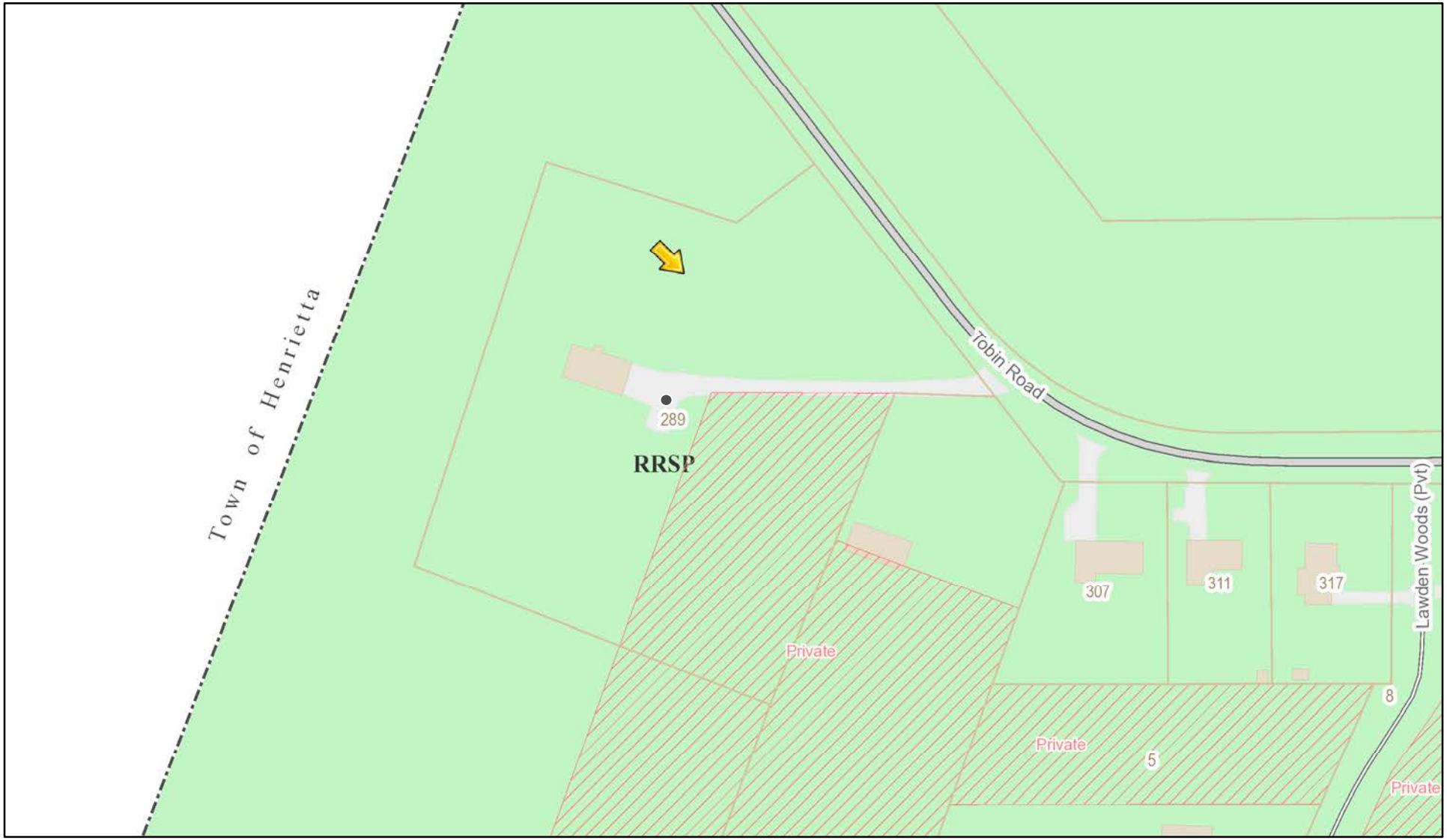

Printed October 4, 2022

1:2,257

0 95 190 380 ft

0 25 50 100 m

Town of Pittsford GIS


255
289
307

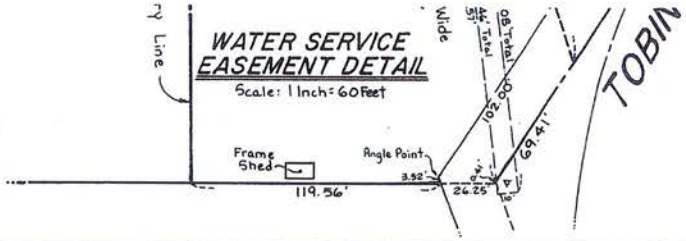

Town Lot 28
Town Lot 40

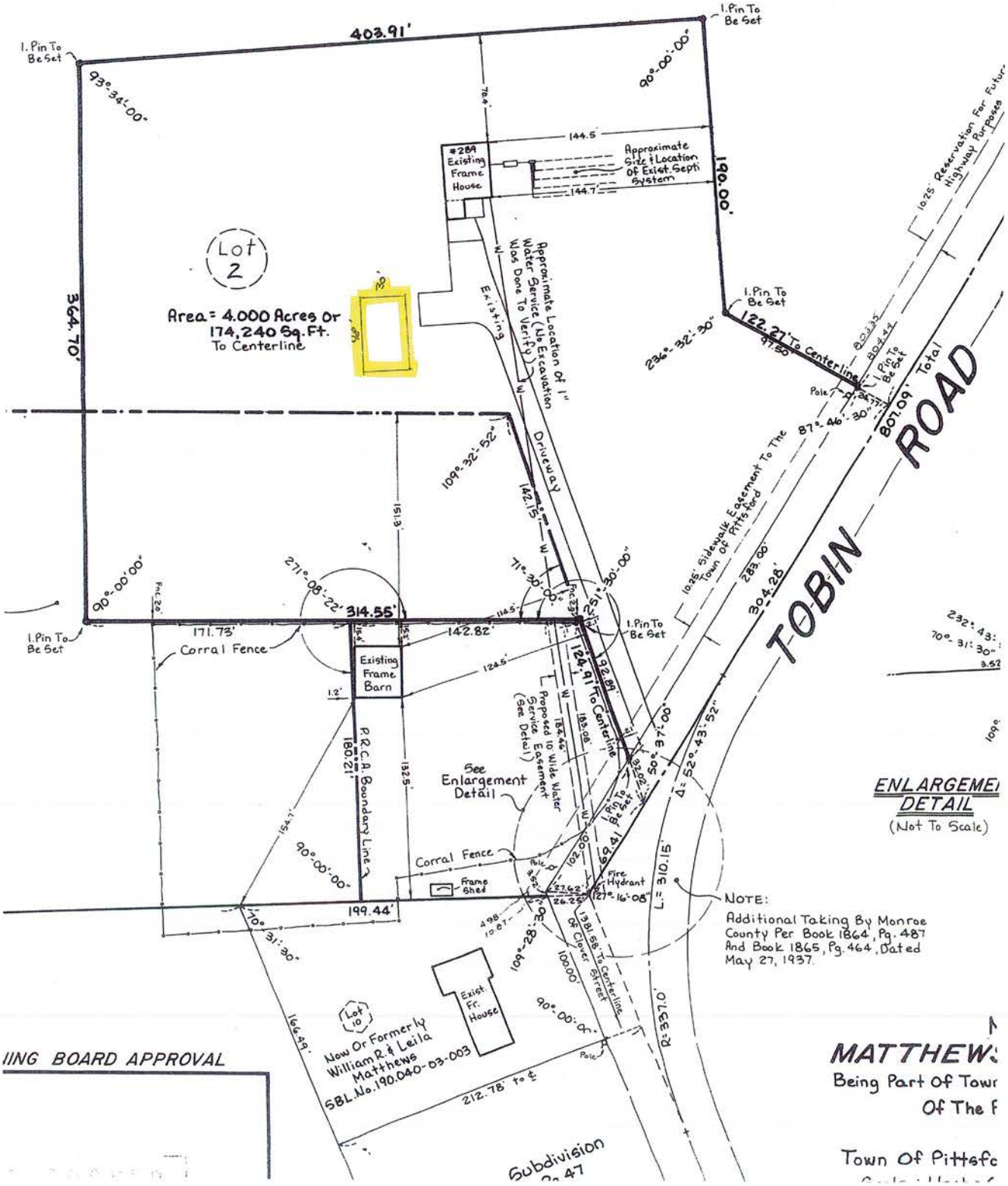

ING BOARD APPROVAL

MATTHEW
Being Part Of Town
Of The F

Town Of Pittsfo

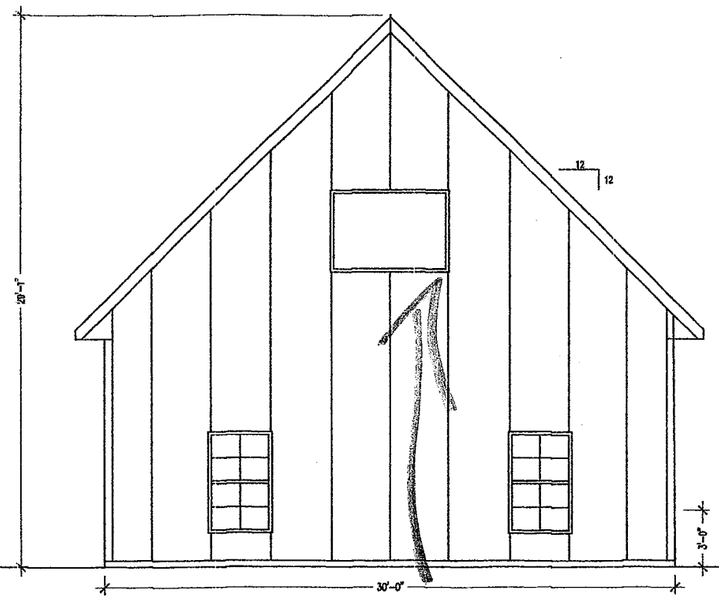

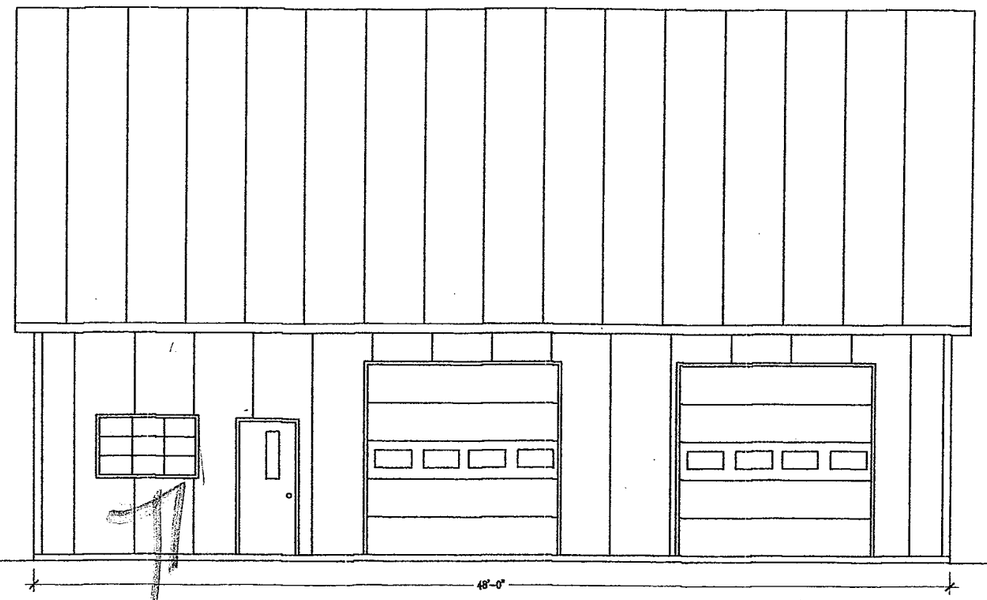

Double Door

4

3

ELEVATIONS

NTS

MAS ENGINEERING
55 Ashley Street
Lyons, New York 14489
☎ 315-946-9552
Cell 315-573-0765

DATE: 24-Dec-18

SCALE: As Noted

4

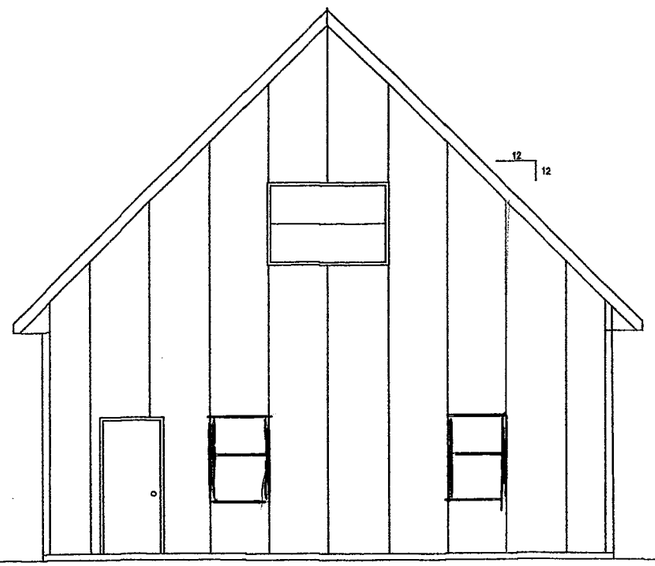

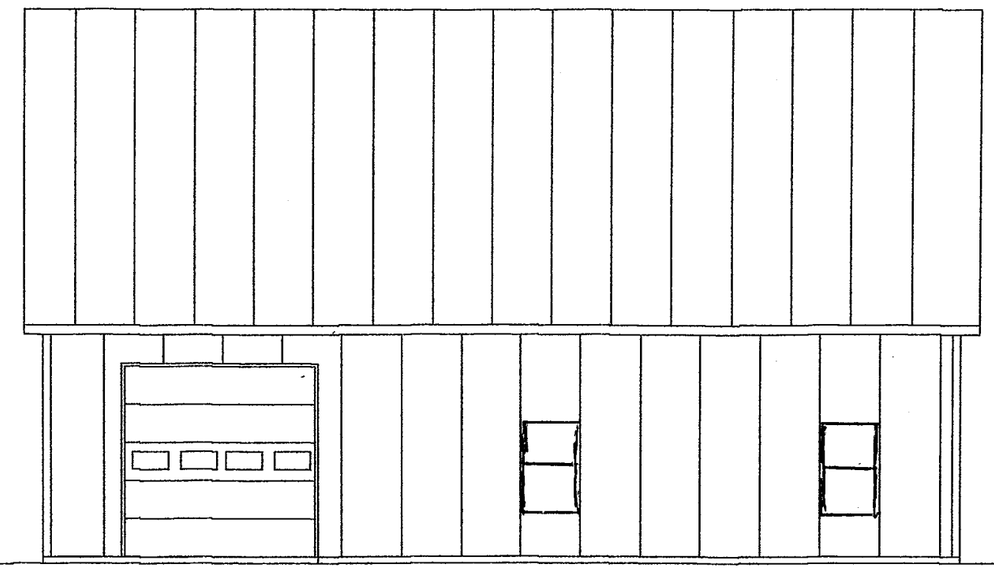

ELEVATIONS

NTS

MAS ENGINEERING
55 Ashley Street
Lyons, New York 14489
☏ 315-946-9552
Cell 315-573-0765

DATE: 24-Dec-18

SCALE: As Noted

Town of Pittsford

Department of Public Works
11 South Main Street
Pittsford, New York 14534

Phone: 585-248-6250
FAX: 585-248-6262

Permit #
RA22-000221

DESIGN REVIEW AND HISTORIC PRESERVATION BOARD
REFERRAL OF APPLICATION

Property Address: 38 Old Farm Circle PITTSFORD, NY 14534
Tax ID Number: 164.19-2-40
Zoning District: RN Residential Neighborhood
Owner: Madden, Lucas H
Applicant: ADS Renovations

Application Type:

- [x] Residential Design Review §185-205 (B)
- [ ] Commercial Design Review §185-205 (B)
- [ ] Signage §185-205 (C)
- [ ] Certificate of Appropriateness §185-197
- [ ] Landmark Designation §185-195 (2)
- [ ] Informal Review
- [ ] Build to Line Adjustment §185-17 (B) (2)
- [ ] Building Height Above 30 Feet §185-17 (M)
- [ ] Corner Lot Orientation §185-17 (K) (3)
- [ ] Flag Lot Building Line Location §185-17 (L) (1) (c)
- [ ] Undeveloped Flag Lot Requirements §185-17 (L) (2)

Project Description: Applicant is requesting design review for the construction of a 180 SF pool pavilion.

Meeting Date: October 13, 2022

RN Residential Neighborhood Zoning

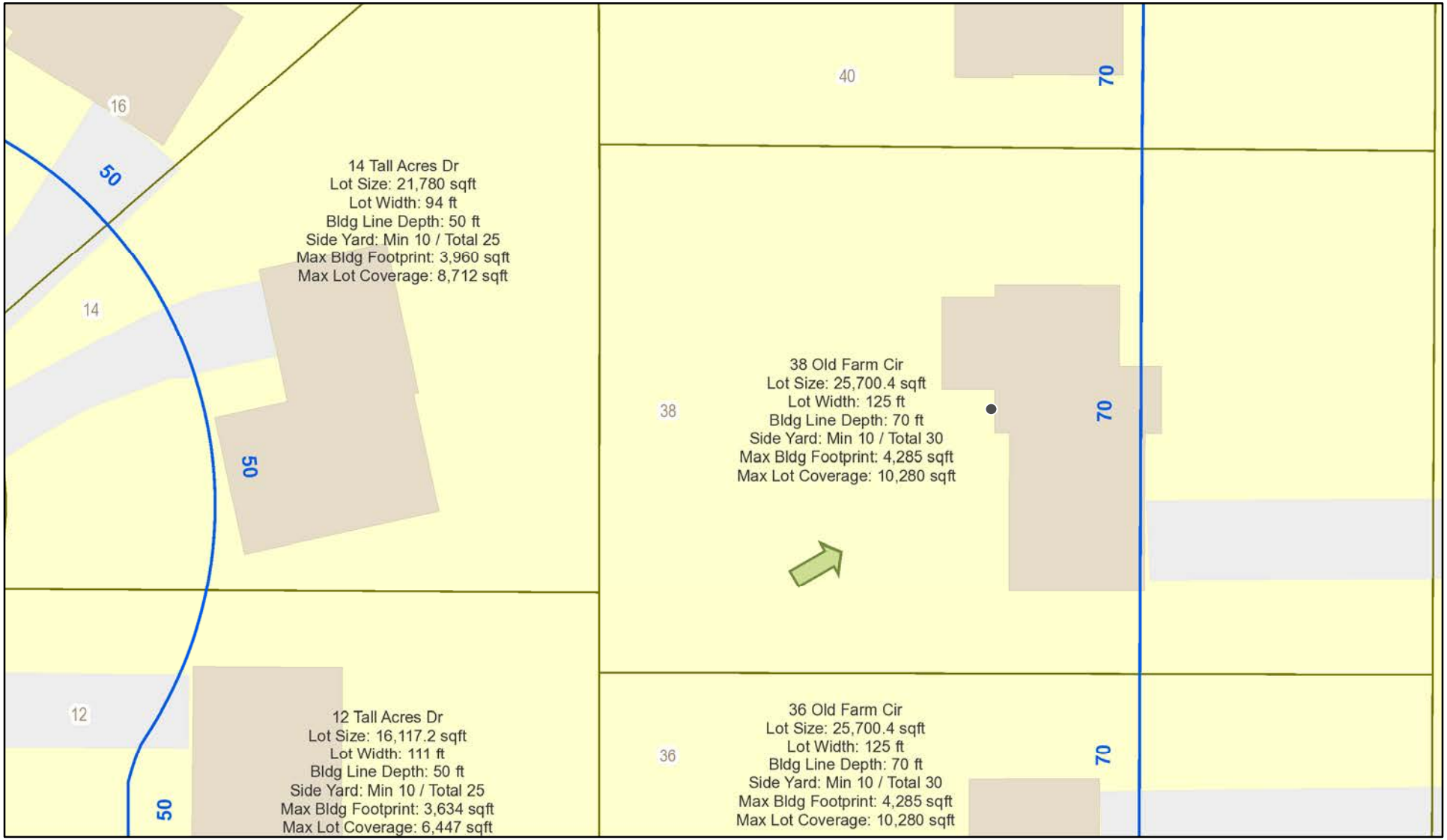

Printed October 4, 2022

1:564

0 20 40 80 ft

0 5 10 20 m

Town of Pittsford GIS

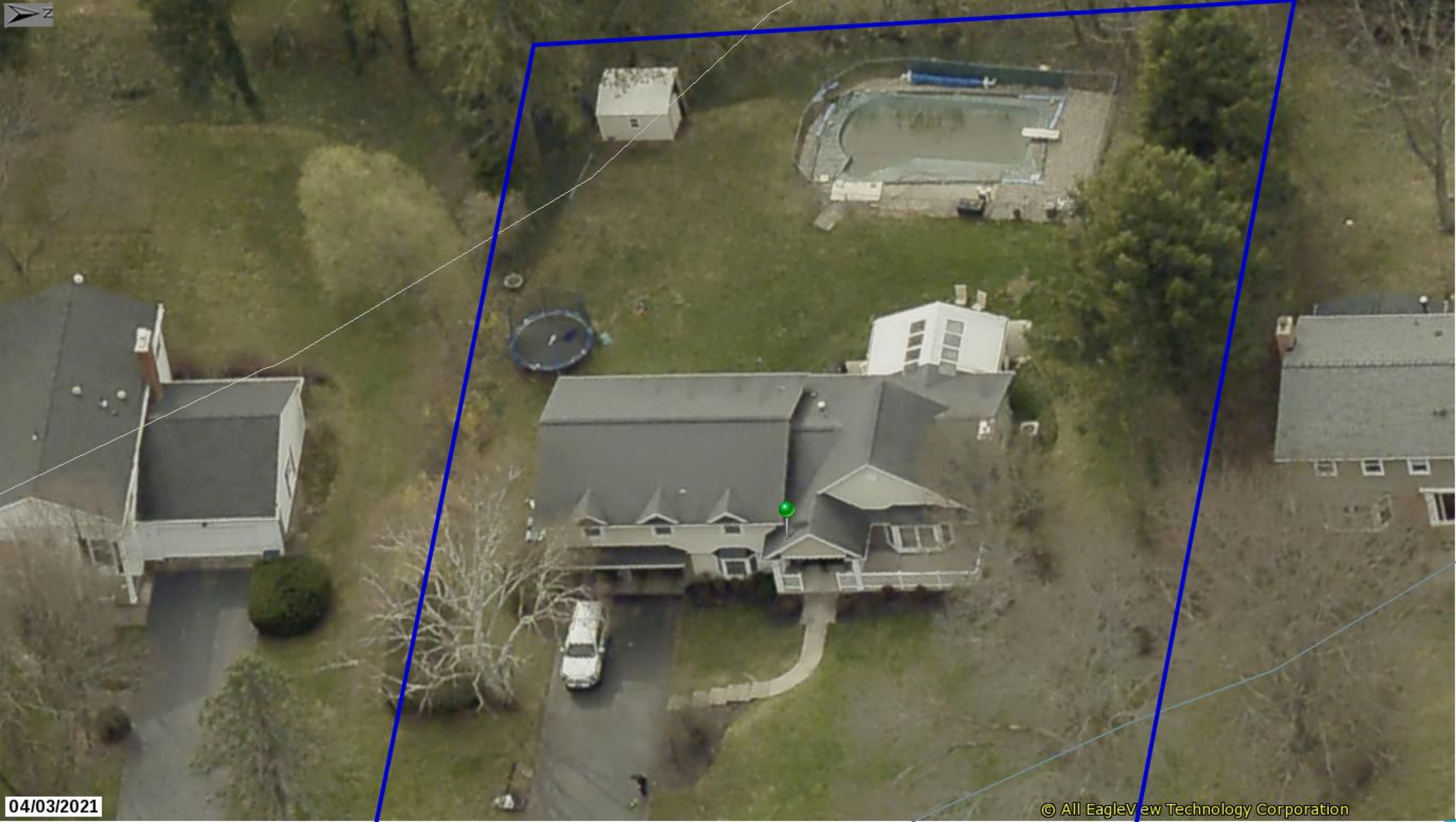
04/03/2021
© All EagleView Technology Corporation

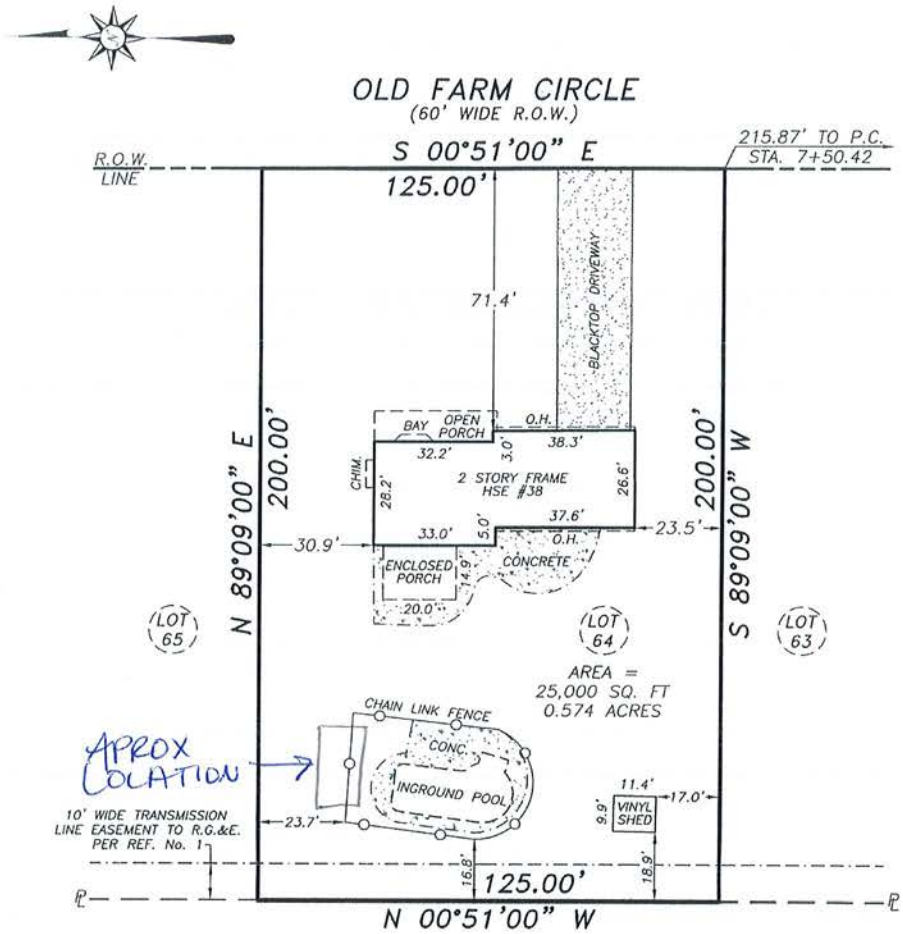

CERTIFICATION:

I, DAVID A. STAUB, HEREBY CERTIFY TO:
-FIRST AMERICAN TITLE INSURANCE COMPANY
-MORGENSTERN DEVOESICK PLLC
-GALLO & IACOVANGELO, LLP
-CNB MORTGAGE COMPANY,
ITS SUCCESSORS AND/OR ASSIGNS
-LUCAS H. MADDEN & CHELSEA A. MADDEN
THAT THIS MAP WAS MADE OCTOBER 21, 2016
FROM NOTES OF AN INSTRUMENT SURVEY
COMPLETED OCTOBER 20, 2016
AND REFERENCES LISTED HEREON.

STATE OF NEW YORK
DAVID A. STAUB
050791
LICENSED LAND SURVEYOR

10/21/16

N.Y.S.P.L.S. No. 50791 DATE

REFERENCES:

1.) LIBER 147 OF MAPS, PAGE 51.
2.) LIBER 7906 OF DEEDS, PAGE 66.
3.) ABSTRACT OF TITLE No. TSA-2016-3569 (TIMES SQUARE).
4.) DEED RESTRICTIONS PER LIBER 3556 OF DEEDS, PAGE 92.
5.) EASEMENT TO R.G.&E. PER LIBER 3301 OF DEEDS, PAGE 291. (ALONG ROAD R.O.W. - NO WIDTH GIVEN)
6.) EASEMENT TO R.G.&E. & R.T.C. PER LIBER 3301 OF DEEDS, PAGE 288. (ALONG SIDE & REAR LINES - NO WIDTH GIVEN)

NOTES: 1.) PREMISES SUBJECT TO ALL EASEMENTS, RESTRICTIONS & COVENANTS OF RECORD NOT REFERENCED IN ABSTRACT OF TITLE.
2.) THE USE OF THIS MAP IN CONJUNCTION WITH AN AFFIDAVIT OF NO CHANGES RELEASES THE SURVEYOR OF ALL RESPONSIBILITY

TITLE:

INSTRUMENT SURVEY MAP

38 OLD FARM CIRCLE
BEING LOT No. 64 OF
THE KNICKERBOCKER HILL SUBDIVISION,
TOWN OF PITTSFORD, COUNTY OF MONROE, STATE OF NEW YORK

WAYNE ONTARIO MONROE

TRIPLE POINT LAND SURVEYING, LLC.
16 EAST MAIN STREET SUITE 320
ROCHESTER, NEW YORK 14614
PHONE (585) 263-9950
FAX (585) 263-3591
TRIPLEPOINTSURVEYING@YAHOO.COM

SCALE:	TAX ACCOUNT:	JOB NO.:	DATE:
1" = 40'	164.19-2-40	1467-16	OCT. 21, 2016

JOB NUMBER: E282-10	PROJECT: STANDARD PLANS FOR 12'x20' WOOD PAVILION	
PAGE: F1		

This foundation design is to be used together with the complete structural pavilion drawings by Timber Tech Engineering, Inc. and is acceptable for the following four-post Wood pavilion size only:12'x20' for 160 mph V_{ASD}.

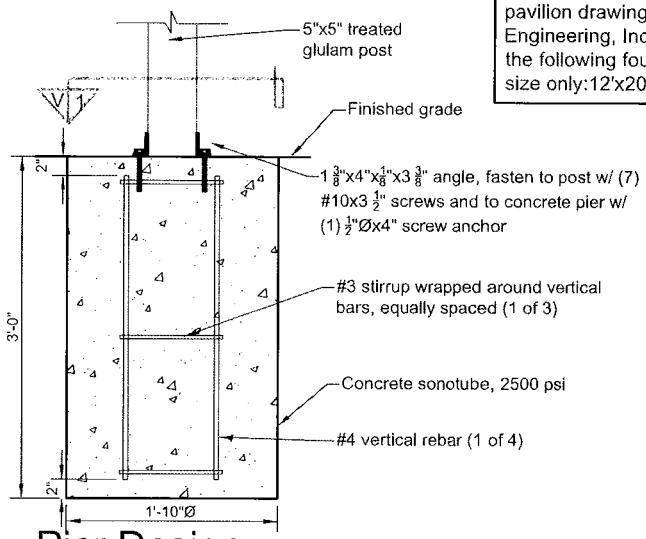

Pier Design

NTS

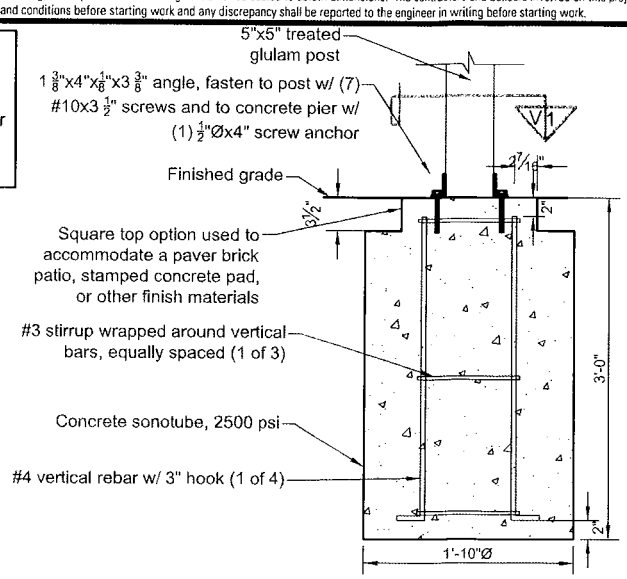

Alternative Pier Design

NTS

Square Top

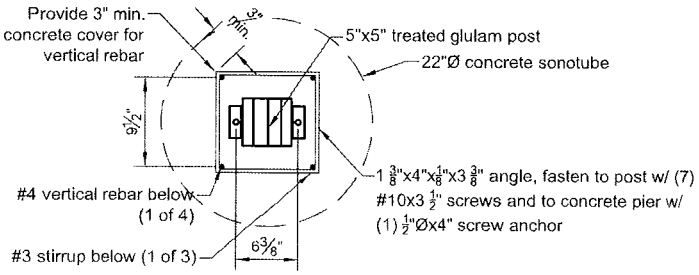

View 1 Pier Design

NTS

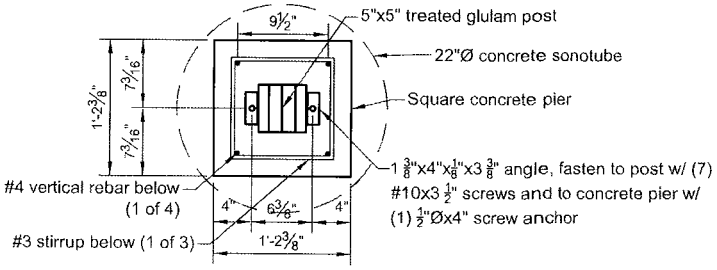

View 1 Alternative Pier Design

NTS

Square Top

JOB NUMBER: E282-10 PAGE: F2	PROJECT: STANDARD PLANS FOR 12'x20' WOOD PAVILION	This drawing is the property of Country Lane Woodworking, LLC, provided by Timber Tech Engineering, Inc. and reproduction, alteration or use of this drawing without the written consent of Country Lane Woodworking, LLC is prohibited. Drawings shall not be scaled to obtain dimensions. The contractors and builders involved on this project shall verify all dimensions and conditions before starting work and any discrepancy shall be reported to the engineer in writing before starting work.

EARTHWORK

1. Requirements
   A. Provide a construction grade extending ten feet beyond building exterior walls or an alternative method per Section 1804 of the IBC.
   B. Excavate for foundations to subgrade elevations regardless of character of materials and obstructions encountered, unless otherwise approved by the structural engineer.
   C. Perform excavation work in compliance with applicable requirements of authorities having jurisdiction.
2. Materials
   A. Satisfactory soil: ASTM D2487 unified soil classification groups GW, GP, GM, SW, SP, and SM; free of rock or gravel larger than two inches in any dimension, debris, waste, frozen materials, vegetation, or other deleterious matter.
   B. Unsatisfactory soil: ASTM D2487 unified soil classification groups GC, SC, ML, MH, CL, CH, OL, OH, and PT.
   C. Backfill and fill: satisfactory soil materials.
3. Execution
   A. Footings have been designed for an assumed allowable loadbearing pressure of 2,000 psf . (No increases permitted.) The contractor shall verify this assumption, and shall immediately notify the structural engineer in writing of any deficiency.
   B. Place backfill and fill in layers not more than eight inches in loose depth at optimum moisture content. Compact each layer under footings and slabs to a dry density of at least 95 percent of maximum dry density as determined by ASTM D1557.
   C. Bottom of exterior footings shall be a minimum of 36 inches below finished grade, unless noted otherwise

Structural Steel

1. Connections shall be designed and constructed according to AISC, and shall conform to the following:
   A. Screw Anchors (exterior applications): Use screw anchors of the diameter and length indicated on the drawings as manufactured by Red Head or approved equal. Use LDT Stainless Steel bolts, or LDT bolts with EnvireX coating in concrete and CMU. Fill CMU cells at all bolt locations.
   B. Connections exposed to weather or high relative humidity shall be hot-dip galvanized per ASTM A153 / A153M.

CAST-IN-PLACE CONCRETE

1. Concrete work shall conform to the following specifications by The American Concrete Institute (ACI).
   A. "Building Code Requirements for Structural Concrete" (ACI 318).
   B. "Hot Weather Concreting" (ACI 318).
   C. "Cold Weather Concreting" (ACI 318).
2. Materials used shall adhere to the following:
   A. Portland Cement: ASTM C150, type 1.
   B. Fly Ash: ACI 318.
   C. Aggregates: ASTM C33, maximum aggregate size is one inch.
   D. Fiberglass reinforcement: PCI MNL 128 Standard.
   E. Air-entraining admixture: ACI 318.
   F. Chemical admixtures: ASTM C494, water reducing. All concrete, except footings, shall contain a water reducing admixture. No admixtures containing calcium chloride are permitted. All other additives shall not be used without prior approval of the structural engineer.
   G. Vapor retarder: Clear 8-mil thick polyethylene.
3. Proportion normal-weight (145 pcf) concrete mixes to provide the following properties:
   A. Compressive strength: 3,000 psi at 28 days (unless noted otherwise).
   B. Slump limit: 4 inches (3 inches for slab-on-grade) at point of placement.
   C. Water-cement ratio: 0.45 maximum at point of placement.
   D. Air content: 5 to 7 percent for concrete exposed to freezing and thawing, 2 to 4 percent elsewhere.
4. Reinforcing steel shall be fabricated, detailed and placed in accordance with the ACI 318, and shall conform to the following:
   A. Deformed reinforcing bars: ASTM A615/A 615M with a minimum yield strength of 60,000 psi (grade 60).
   B. Welded wire fabric (WWF): ASTM A1064, flat sheets, not rolls.
   C. Ties/Stirrups: ASTM A615/A615M, grade 40.
5. Concrete work shall be executed according to the following:
   A. Maintain tolerances and surface irregularities within ACI 117 limits of class A for concrete exposed to view, and class C for other concrete surfaces. Floor slabs shall be screeded, floated and steel troweled to a smooth, dense and plane surface.
   B. Accurately position, support, and secure reinforcement.
      1. Reinforcing bars shall lap 48 bar diameters at splices in concrete unless otherwise noted.
      2. Provide corner bars to match all continuous reinforcing in concrete and masonry.
      3. Reinforcing bar hooks shall be ACI standard.
      4. WWF shall have ends lapped one full mesh, and shall extend onto supporting walls.
      5. Chairs, bolsters, bar supports, and spacers shall be sized and shaped for strengthand support of reinforcement during concrete placement.
   C. Provide minimum concrete cover on reinforcing bars as follows:
      1. Cast againsl earth.....3"
      2. Exposed to earth or weather (#5 or smaller)...1 1/2"
      3. Exposed to earth or weather (#6 or larger).....2"
      4. Slabs and walls not exposed.....3/4"
   D. The contractor shall be responsible for stability and integrity of all excavations and existing structures.

12'x20' Rectangle Vinyl Pavilion

Drawing Index

GENERAL NOTES

All notes do not necessarily apply due to different requirements on each project. This plan is intended to reflect only the structural design of this building. The contractor shall review all applicable local, state, and federal building codes prior to the start of construction to ensure building conformance. Timber Tech Engineering, Inc. is not responsible for information pertaining to this project if not shown on drawings or listed below. Revisions to the plans shall be approved by engineer of record.

DESIGN REQUIREMENTS

1. Governing Code:
   Including, not limited to: IBC 2015 (ASCE 7-10)
   Risk Category I
2. Dead Loads:
   A. Roof 10 psf
   B. Floor n/a psf
   C. Other n/a psf
3. Live Loads:
   A. Roof (See also note #4) 30 psf
   B. Floor n/a psf
   C. Other n/a psf
4. Snow Loads:
   A. Ground Snow (Pg) 45 psf
   B. Flat Roof Snow (Pf) 30 psf
   C. Snow Exposure Factor (Ce) 1.0
   D. Snow Load Importance Factor (I) 0.8
5. Wind Load
   A. Ultimate Wind Speed (V ult) 160 mph
   B. Nominal Wind Speed (V asd) 142 mph
   C. Wind Exposure Category C
   D. Enclosure Category Open
6. Earthquake Design Data:
   (Analysis based on equivalent lateral force procedure)
   A. Spectral Response Acceleration at 1 sec, S 0.35
   B. Spectral Response Acceleration at short periods, S 0.75
   C. Seismic Importance Factor, I 1.0
   D. Site Class D
   E. Seismic Design Category D
   F. Basic Structural System
      Cantilevered Column: Timber Frame
   G. Response Modification Factor (R) 1.5
   H. Deflection Amplification Factor (Cd) 1.5

WOOD

1. General Requirements
   A. Structural wood members and connections shall be of sufficient size or capacity to carry all design loads without exceeding the allowable design values specified in "The National Design specification for Wood Construction" (NDS), and its "Supplement" by the American Wood Council (AWC).
   B. Wood members used for load supporting purposes shall have the grade mark of a lumber grading agency certified by the American Lumber Standards Committee.
2. Heavy Timbers
   A. Structural solid sawn timbers shall be designed, fabricated and installed in accordance with the NDS by AWC.
   B. Structural glued laminated soft wood timbers shall conform with the "American National Standard or Structural Glued Laminated Timber", (ANSI/AITC 190.1).
   C. Structural decking shall conform to the NDS.
   D. Glued laminated columns shall be manufactured with laminating combinations that will provide a minimum design value of 1,850 psi for compressive stress (Fc), and 2,200 psi for bending stress (Fb).
3. Dimension Lumber
   A. All lumber species, graded visually or mechanically, shall comply with the NDS by AWC, and the "American Softwood Lumber Standard" (PS 20) by the U.S. Department of Commerce.
   B. The minimum grade and species for posts, beams, headers, and other primary structural members shall be Dense Select Structural Southern Pine, unless specified otherwise.
   C. Lumber used for secondary framing shall be #1 Southern Yellow Pine (SYP) or better.
   D. Mechanically laminated columns shall conform with ANSI/ASAE EP 559.
4. Pressure Preservative Treatment (PPT)
   A. Pressure treatment to be performed according to the American Wood Preservers' Association (AWPA) standards.
   B. Pressure treated members shall have the inspection mark of an agency accredited by the American Lumber Standards Committee.
   C. Preservative: Ammonia Copper Quaternary ammonia (ACQ) or Copper Boron Azole (CBA)
   D. Minimum waterborne treatment retention shall be 0.4 pcf for members above ground, and 0.6 pcf for members in contact with earth.
   E. Treat indicated items and the following:
      1. Wood members exposed to weather or insect infestation.
      2. Wood members in direct contact with earth or concrete.
      3. Wood members exposed to high moisture content (>19% for dimension lumber, >16% for glued laminated timber).
      4. Wood members less than 12 inches above grade.
   F. Field treat newly exposed wood where cutting, drilling or notching pressure treated lumber.
   G. Metal connectors used in treated wood shall be hot-dip galvanized as per ASTM A153.
5. Connections shall be designed and constructed according to the NDS by AWC and shall conform to the following:
   A. The minimum connection shall be two #10x3 $\frac{1}{2}$" wood screws, or as detailed on the drawings.
   B. Other connections as per standard construction practice.

Polyvinyl Chloride Compound (PVC)

1. General Requirements
   A. PVC sleeve material used to wrap wood members to be supplied according to Certainteed corporation specifications or equivalent.
   B. PVC sleeve material to be 0.160" thick for posts, and 0.105" thick for other structural members

Design Reaction Chart	
Max. uplift at column base	1000 lb
Max. downward force at column base	2650 lb
Max. shear at column base	450 lb

TTE DRAWING NUMBER: E191-10

JOB NUMBER: E191-10 PAGE: 1 OF 8	PROJECT: STANDARD PLANS FOR 12'x20' RECTANGLE VINYL PAVILION	

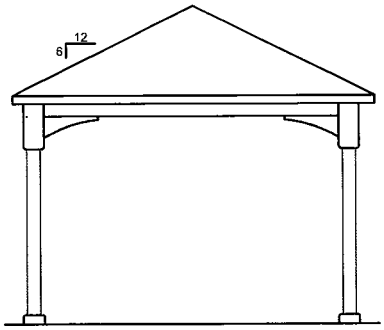

End Elevation

NTS

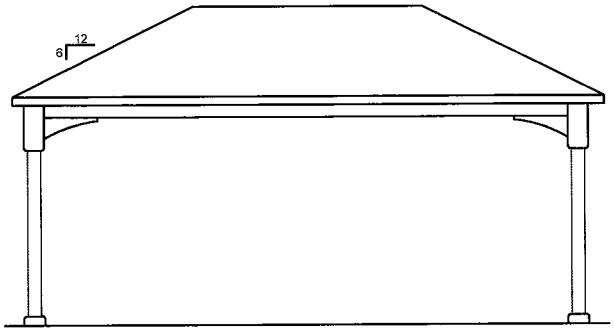

Side Elevation

NTS

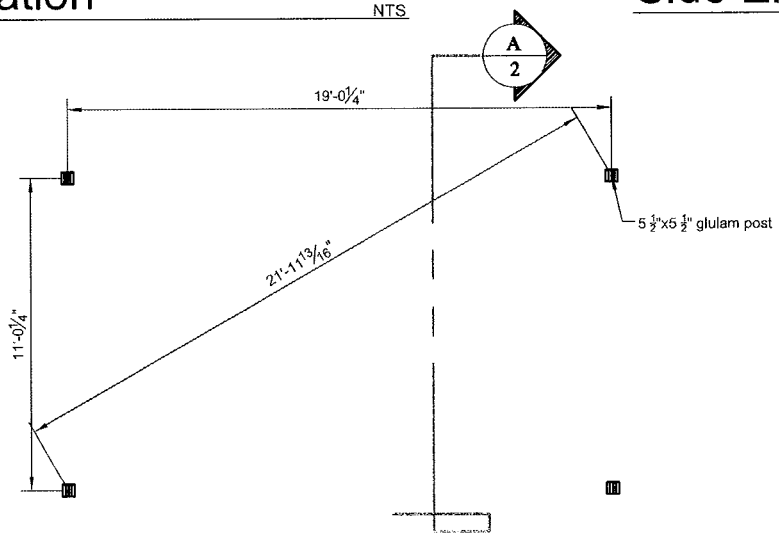

Post Layout Plan

NTS

JOB NUMBER: E191-10	PROJECT: STANDARD PLANS FOR 12'x20' RECTANGLE VINYL PAVILION	This drawing is the property of Country Lane Woodworking, LLC, provided by Timber Tech Engineering, Inc. and reproduction, alteration or use of this drawing without the written consent of Country Lane Woodworking, LLC is prohibited. Drawings shall not be scaled to obtain dimensions. The contractors and builders involved on this project shall verify all dimensions and conditions before starting work and any discrepancy shall be reported to the engineer in writing before starting work.
PAGE: 2 OF 8		

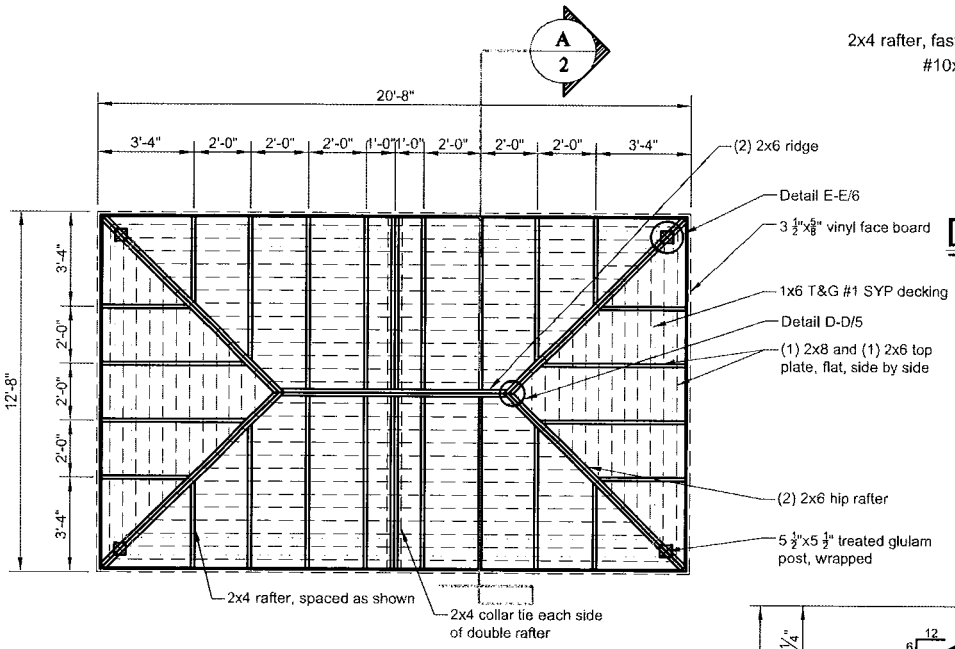

Roof Framing Plan

NTS

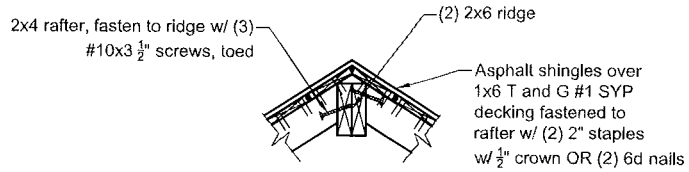

Detail A-A/2

Typical Single Rafter

NTS

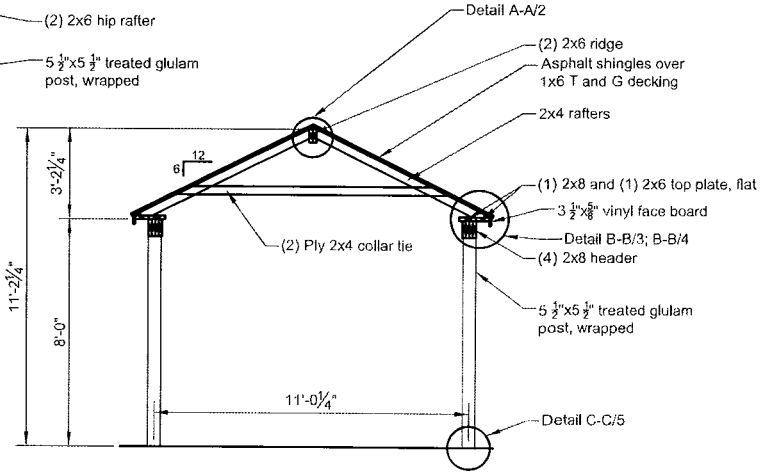

Cross Section A/2

NTS

JOB NUMBER: E191-10 PAGE: 3 OF 8	PROJECT: STANDARD PLANS FOR 12'x20' RECTANGLE VINYL PAVILION	

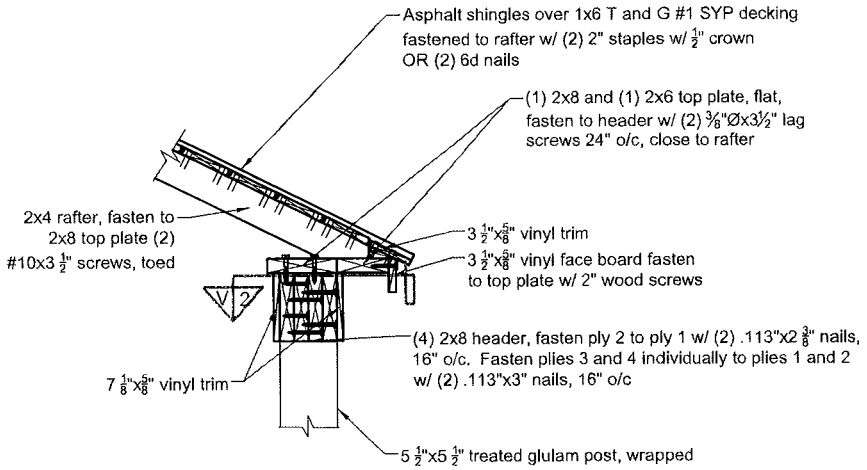

Detail B-B/3
NTS

Typical Single Rafter

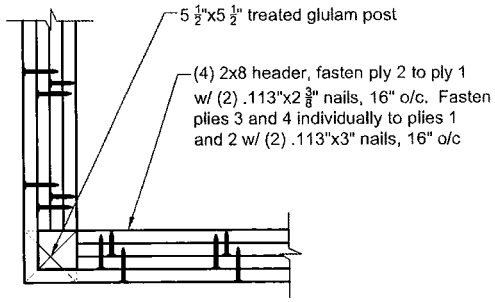

View 2 Detail B-B/3
NTS

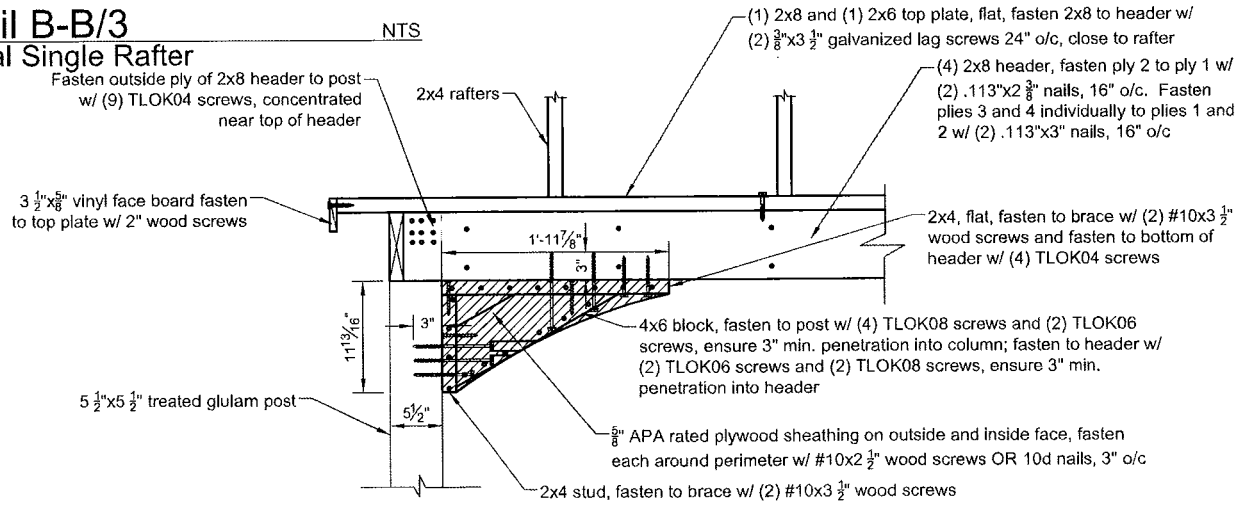

View 1 Detail B-B/3
NTS

PROJECT: STANDARD PLANS FOR 12'x20' RECTANGLE VINYL PAVILION

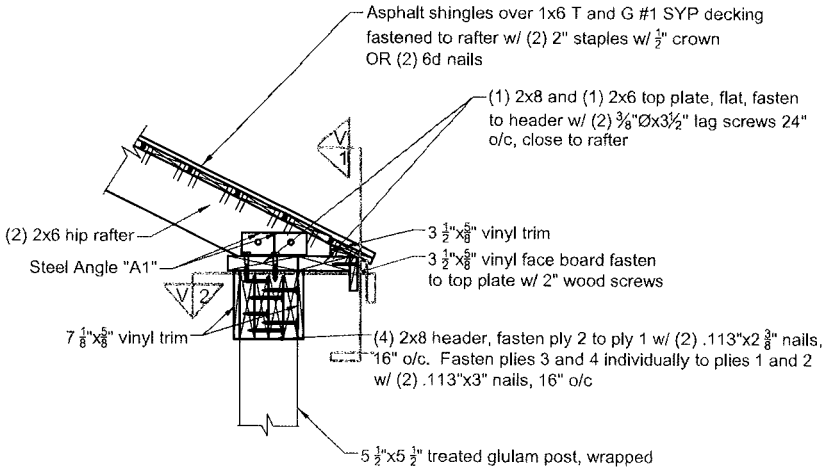

Detail B-B/4

NTS

Hip Rafter Connection

JOB NUMBER: E191-10	PROJECT: STANDARD PLANS FOR 12'x20' RECTANGLE VINYL PAVILION	This drawing is the property of Country Lane Woodworking, LLC, provided by Timber Tech Engineering, Inc. and reproduction, alteration or use of this drawing without the written consent of Country Lane Woodworking, LLC is prohibited. Drawings shall not be scaled to obtain dimensions. The contractors and builders involved on this project shall verify all dimensions and conditions before starting work and any discrepancy shall be reported to the engineer in writing before starting work.
PAGE: 5 OF 8		

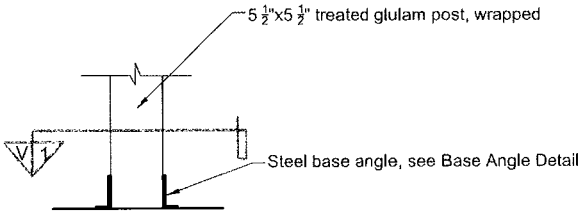

Detail C-C/5 NTS

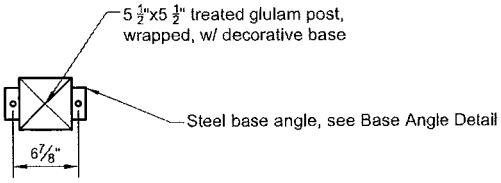

View 1 Detail C-C/5 NTS

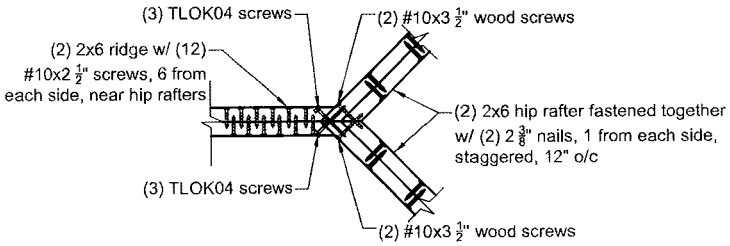

Detail D-D/5 NTS
Option 1

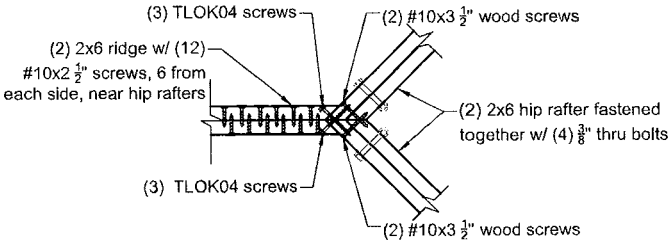

Detail D-D/5 NTS
Option 2

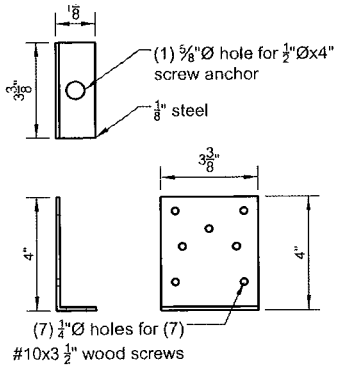

Base Angle Detail NTS

JOB NUMBER: E191-10	PROJECT: STANDARD PLANS FOR 12'x20' RECTANGLE VINYL PAVILION	This drawing is the property of Country Lane Woodworking, LLC. provided by Timber Tech Engineering, Inc. and reproduction, alteration or use of this drawing without the written consent of Country Lane Woodworking, LLC is prohibited. Drawings shall not be scaled to obtain dimensions. The contractors and builders involved on this project shall verify all dimensions and conditions before starting work and any discrepancy shall be reported to the engineer in writing before starting work.
PAGE: 6 OF 8		

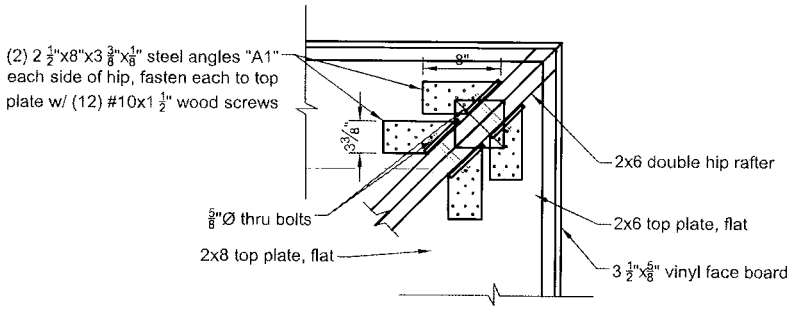

Detail E-E/6

NTS

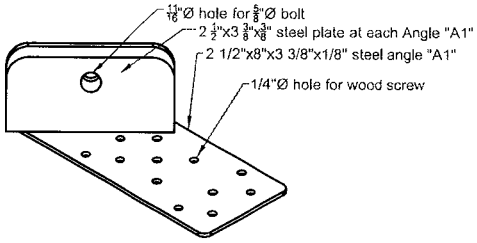

Angle "A1"

NTS

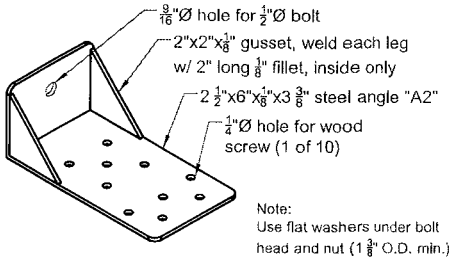

Note:
Use flat washers under bolt head and nut (1 3/8" O.D. min.)

Angle "A2"

NTS

JOB NUMBER: E191-10 PAGE: 7 OF 8	PROJECT: STANDARD PLANS FOR 12'x20' RECTANGLE VINYL PAVILION	This drawing is the property of Country Lane Woodworking, LLC. provided by Timber Tech Engineering, Inc. and reproduction, alteration or use of this drawing without the written consent of Country Lane Woodworking, LLC is prohibited. Drawings shall not be scaled to obtain dimensions. The contractors and builders involved on this project shall verify all dimensions and conditions before starting work and any discrepancy shall be reported to the engineer in writing before starting work.

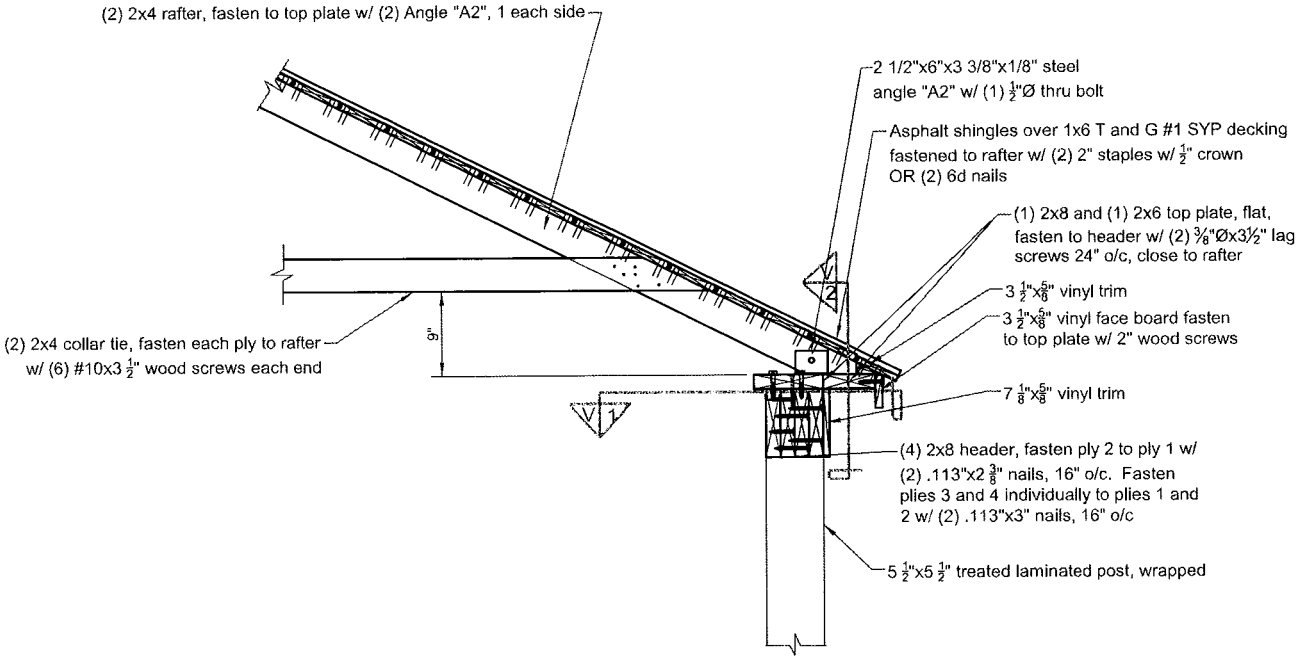

Detail F-F/7

NTS

Center Double Rafter

JOB NUMBER: E191-10	PROJECT: STANDARD PLANS FOR 12'x20' RECTANGLE VINYL PAVILION	This drawing is the property of Country Lane Woodworking, LLC, provided by Timber Tech Engineering, Inc. and reproduction, alteration or use of this drawing without the written consent of Country Lane Woodworking, LLC is prohibited. Drawings shall not be scaled to obtain dimensions. The contractors and builders involved on this project shall verify all dimensions and conditions before starting work and any discrepancy shall be reported to the engineer in writing before starting work.
PAGE: 8 OF 8		

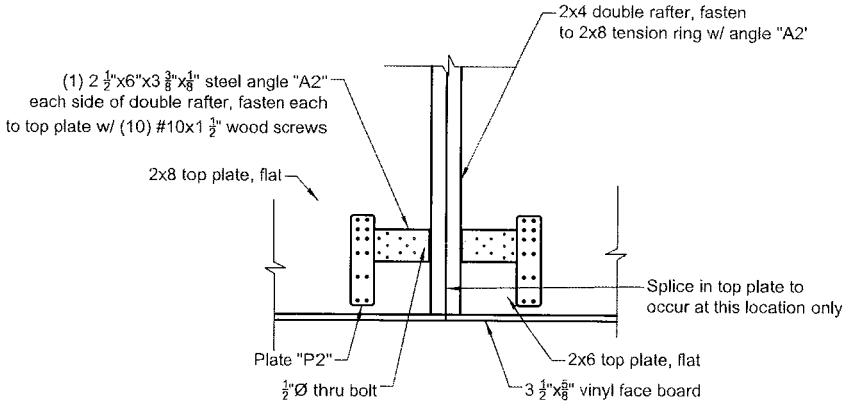

View 1 Detail F-F/7

NTS

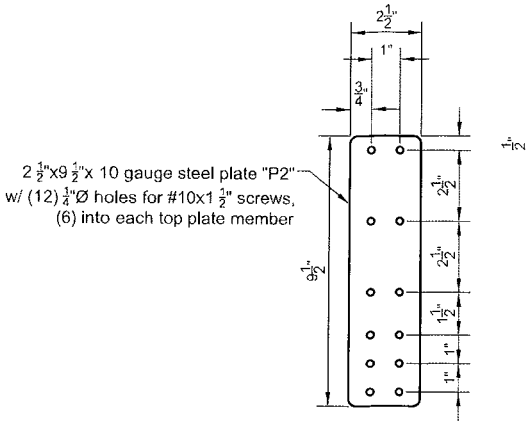

Plate "P2"

NTS

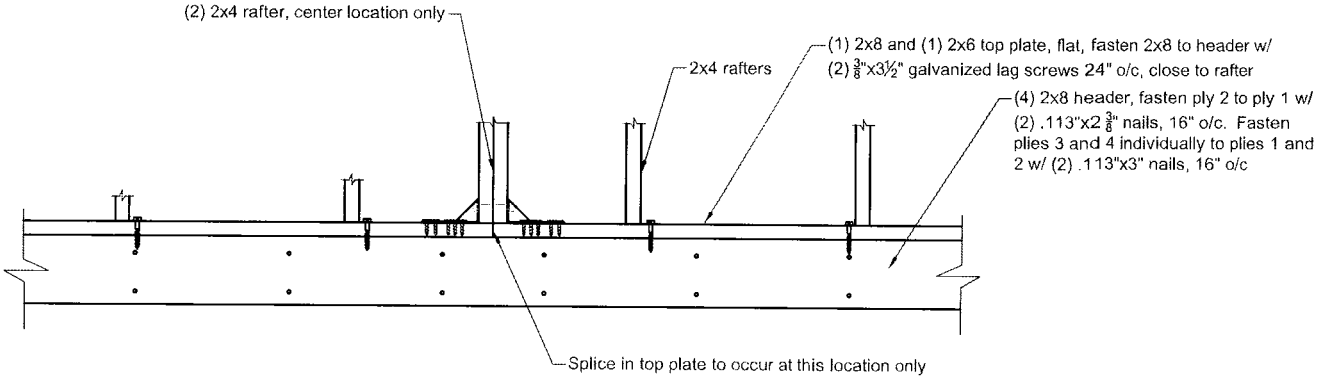

View 2 Detail F-F/7

NTS

Backyard Pics - 38 Old Farm Circle

Facing North

Facing Southwest

Facing East

Proposed location of structure

TBD on wood or Vinyl. Post location/ Size is the Same

Town of Pittsford

Department of Public Works
11 South Main Street
Pittsford, New York 14534

Phone: 585-248-6250
FAX: 585-248-6262

Permit #
B22-000147

DESIGN REVIEW AND HISTORIC PRESERVATION BOARD
REFERRAL OF APPLICATION

Property Address: 31 Falcon Trail PITTSFORD, NY 14534
Tax ID Number: 165.09-3-9
Zoning District: RN Residential Neighborhood
Owner: Gilmore, Daniel R
Applicant: Gilmore, Daniel R

Application Type:

- [x] Residential Design Review §185-205 (B)
- [ ] Commercial Design Review §185-205 (B)
- [ ] Signage §185-205 (C)
- [ ] Certificate of Appropriateness §185-197
- [ ] Landmark Designation §185-195 (2)
- [ ] Informal Review
- [ ] Build to Line Adjustment §185-17 (B) (2)
- [ ] Building Height Above 30 Feet §185-17 (M)
- [ ] Corner Lot Orientation §185-17 (K) (3)
- [ ] Flag Lot Building Line Location §185-17 (L) (1) (c)
- [ ] Undeveloped Flag Lot Requirements §185-17 (L) (2)

Project Description: The applicant is requesting design review for a 224SF unconditioned addition to rear of garage

Meeting Date: October 13, 2022

RN Residential Neighborhood Zoning

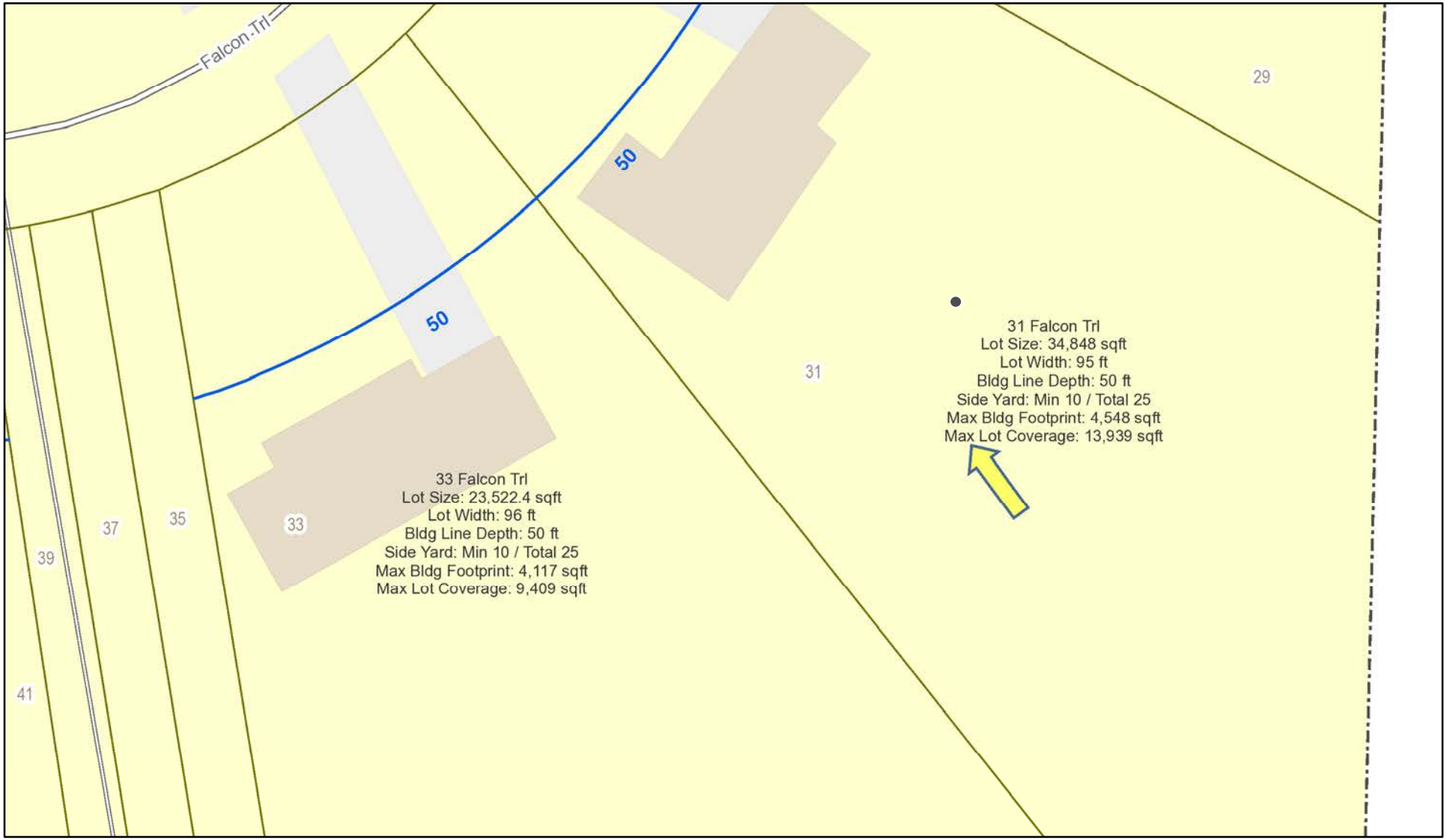

Printed October 4, 2022

1:564

0 20 40 80 ft

0 5 10 20 m

Town of Pittsford GIS


Falcon Trl
Falcon Trl
Unnamed Street
04/03/2021
© All EagleView Technology Corporation

GENERAL NOTES:

1. THESE PLANS HAVE BEEN PREPARED TO THE BEST OF THE ARCHITECT'S KNOWLEDGE, BELIEF, AND PROFESSIONAL JUDGMENT IN ACCORDANCE WITH THE 2020 RESIDENTIAL CODE OF NEW YORK STATE AND ENERGY CONSERVATION CODE REQUIREMENTS. THE CONTRACTOR SHALL BE RESPONSIBLE FOR ADAPTING THESE PLANS, IF REQUIRED, TO SUIT THE NEEDS OF THE BUILDING ON THE SITE. PROVIDED THAT THE ALTERATIONS DO NOT VIOLATE THE CODE OR ALTER THE STRUCTURAL INTEGRITY OF THE BUILDING.

2. THE CONTRACTOR SHALL BE RESPONSIBLE FOR COMPLIANCE WITH ALL APPLICABLE BUILDING/ELECTRICAL/MECHANICAL/SANITARY AND ENERGY CODES, STATE OR LOCAL. THE CONTRACTOR SHALL BE RESPONSIBLE FOR COMPLIANCE WITH THE ENERGY CONSERVATION CODE FOR ALL HVAC EQUIPMENT, HVAC CONTROLS, WATER HEATING EQUIPMENT, PIPE AND DUCT INSULATION, AND FLUORESCENT LAMPS AND BALLASTS.

3. THE CONTRACTOR SHALL BE RESPONSIBLE SO THAT BRANDS OF WINDOWS AND DOORS INSTALLED MEET THE NEW YORK STATE ENERGY CONSERVATION CODE REQUIREMENTS. WINDOWS AND / OR DOORS SHOWN ARE INDICATED FOR SIZING ONLY.

4. ALL FOOTINGS SHALL REST ON UNDISTURBED VIRGIN SOIL. THE FOOTING/FOUNDATION DESIGN ASSUMES MINIMUM SOIL BEARING PRESSURE TO BE 2000 PSF. CONTRACTOR SHALL BE RESPONSIBLE FOR ALL SUBGRADE CONDITIONS. IF REQUIRED, THE OWNER AND / OR CONTRACTOR SHALL BE RESPONSIBLE FOR HIRING A SOILS ENGINEER TO VERIFY SUBGRADE CONDITIONS AND SUBSTANTIATE ACTUAL BEARING CAPACITY.

5. BACKFILL MATERIALS SHALL BE NATIVE SOIL.
FOR FILL UNDER THE GARAGE FLOOR OR BASEMENT FLOOR,
PROVIDE SAND/ GRAVEL FILL FOR COMPACTION AS NEEDED

6. MINIMUM CONCRETE COMPRESSIVE STRENGTH:
2500 PSI FOOTINGS
2500 PSI FLOOR SLABS

7. CONCRETE BLOCK SHALL CONFORM TO ASTM C90 N-1, WALL REINFORCING - ASTM A82. ALL MORTAR SHALL CONFORM TO ASTM C270, TYPE S - 1 PART PORTLAND CEMENT, 1/4 PART LIME, 3 PARTS SAND.

8. N/A

9. MINIMUM FIBER STRESS IN BENDING (FB) FOR ALL FRAMING LUMBER TO BE 1150 PSI #2 HEM-FIR OR BETTER. PROVIDE DOUBLE FRAMING MEMBERS UNDER PARTITIONS RUNNING IN SAME DIRECTION.

10. N/A

11. N/A

12. PLYWOOD SHALL CONFORM TO U.S. PRODUCT STANDARD PS - 1, THICKNESS AS SHOWN. APA RATED SHEATHING EXP-1. NAILING AND SPACING PER APA RECOMMENDATIONS FOR LOCATIONS INTENDED.

13. ALL WOOD IN CONTACT WITH CONCRETE OR MASONRY SHALL BE FULLY WOOD PRESERVATIVE-TREATED WITH OSMOSALTS OR WOLMAN SALTS.

14. N/A

15. CONTRACTOR SHALL VERIFY ALL NOTES AND DIMENSIONS PRIOR TO CONSTRUCTION. THESE DRAWINGS ARE NOT TO BE SCALED - USE DIMENSIONS GIVEN.

16. CONTRACTOR SHALL BE RESPONSIBLE FOR ALL CONSTRUCTION MEANS, METHODS, TECHNIQUES, SEQUENCES AND SAFETY PRECAUTIONS IN CONNECTION WITH THE WORK

17. THESE DRAWINGS HAVE BEEN PREPARED FOR STRUCTURAL INTENT ONLY. ELECTRICAL MECHANICAL AND OTHER BUILDING SYSTEMS, AS REQUIRED ARE TO BE DESIGNED BY OTHERS.

18. N/A

19. ALL WORK, MATERIALS, METHODS, EQUIPMENT, ETC. SHALL BE IN STRICT ACCORDANCE WITH THE CONTRACT DOCUMENTS. ALL MATERIALS SHALL BE NEW, UNLESS NOTED OTHERWISE.

20. WORK SEQUENCE AND SCHEDULE SHALL BE MUTUALLY AGREED UPON BY BOTH THE OWNER AND THE CONTRACTOR.

21. IT IS ASSUMED THAT THE SUBSURFACE CONDITIONS WILL BE EARTH OR SOIL. IF BEDROCK IS ENCOUNTERED, REMOVAL WILL BE CONSIDERED AN ADDITION TO CONTRACT.

22. ANY DEMOLITION WORK SHALL BE DONE CAREFULLY. ALL DISTURBED SURFACES TO BE REPAIRED APPROPRIATELY. ALL SALVAGEABLE ITEMS SHALL BE TURNED OVER TO THE OWNER.

23. EXAMINATION OF THE SITE SHOULD BE MADE BY ALL CONTRACTORS CONCERNED TO FULLY CONSIDER ALL SITE CONDITIONS WHICH MAY HAVE A BEARING ON THE WORK OF THE ENTIRE PROJECT. SUBMISSION OF A BID IS PRESUMPTIVE EVIDENCE THAT THE BIDDER IS CONVERSANT WITH LOCAL JURISDICTIONS AND HAS MADE DUE ALLOWANCES IN HIS BID FOR ALL CONTINGENCIES. THE OWNER RESERVES THE RIGHT TO REJECT ANY OR ALL BIDS.

24. IT IS THE RESPONSIBILITY OF THE CONTRACTOR TO NOTIFY THE ARCHITECT IN CASE OF ANY OR ALL DEVIATIONS FROM THESE DRAWINGS. THE ARCHITECT SHALL BE HELD HARMLESS AS A RESULT OF ANY UNAUTHORIZED CHANGES TO THESE PLANS. ADDITIONAL FEES MAY OCCUR FOR "AS BUILT" DOCUMENTATION DUE TO CIRCUMSTANCES BEYOND THE ARCHITECT'S CONTROL, OR OWNER / CONTRACTOR CHANGES TO THESE DRAWINGS

25. THE CONTRACTOR SHALL OBTAIN AND PAY FOR ALL PERMITS AND APPROVALS REQUIRED BY THE LOCAL ZONING AND BUILDING DEPARTMENTS AND ANY OTHER GOVERNMENTAL AGENCY HAVING JURISDICTION OVER THE WORK. ALL APPLICABLE REGULATIONS SHALL BE ADHERED TO AND CARRIED OUT BY ALL INDIVIDUALS UNDER THIS CONTRACT.

26. THE CONTRACTOR SHALL FURNISH A CERTIFICATE OF INSURANCE INDICATING THE TYPE AND AMOUNTS OF COVERAGE AS REQUIRED BY NEW YORK STATE AND THE LOCAL MUNICIPALITY.

27. THE CONTRACTOR SHALL REMOVE ALL RUBBISH AND LEAVE THE COMPLETED PROJECT IN A CLEAN STATE, SATISFACTORY TO THE OWNER.

28. THE CONTRACTOR SHALL GUARANTEE HIS WORK AND HIS SUBCONTRACTOR'S WORK AGAINST FAULTY MATERIALS AND WORKMANSHIP IN ACCORDANCE WITH NEW YORK STATE GENERAL BUSINESS LAW.

29. ONLY COPIES FROM THE ORIGINALS OF THESE DRAWINGS MARKED WITH AN ORIGINAL OF THE ARCHITECT'S EMBOSSED SEAL SHALL BE CONSIDERED TO BE VALID TRUE COPIES.

30. BUILDING IS CLASSIFIED AS A ONE FAMILY DWELLING

31. N/A

32. N/A

33. ALL MATERIALS USED IN THIS PROJECT SHALL BE NON-ASBESTOS AND NON-LEAD CONTAINING.

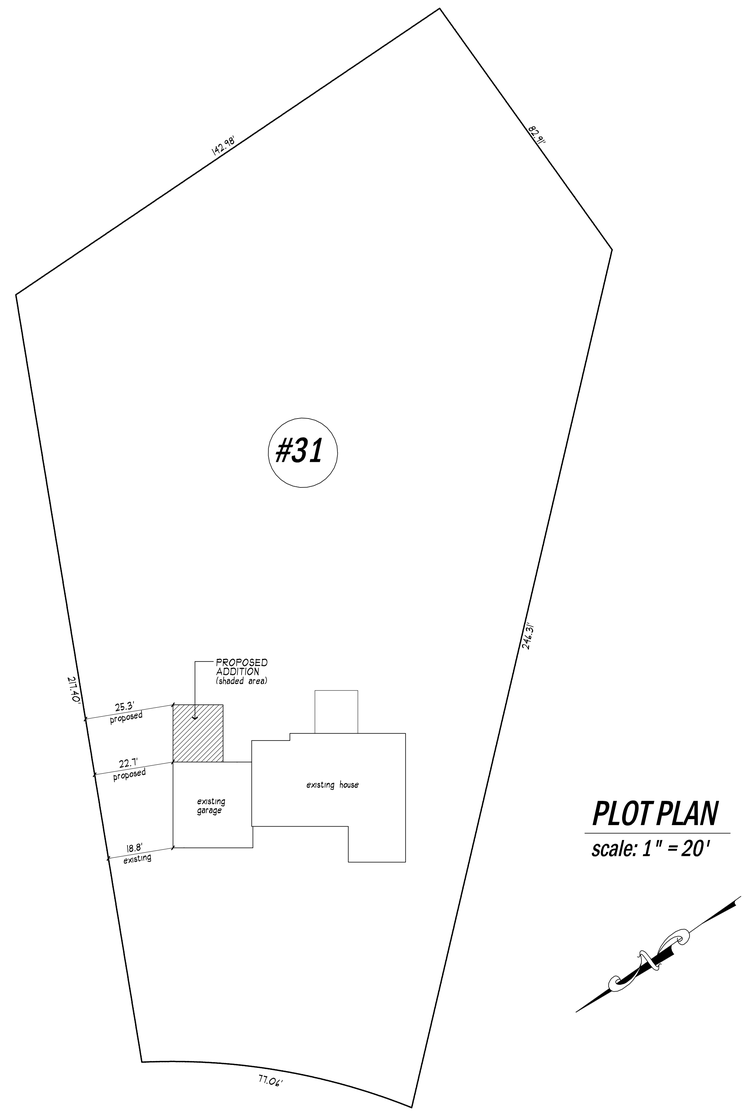

PLOT PLAN

scale: 1" = 20'

FALCON TRAIL

DRAWING INDEX

2020 Energy Conservation Construction Code of New York State

1. A MINIMUM OF 90% OF THE LAMPS IN PERMANENTLY INSTALLED LIGHTING FIXTURES SHALL BE HIGH-EFFICIENCY LAMPS PER SECTION 1104.1
2. RECESSED LUMINARIES INSTALLED IN THE BUILDING THERMAL ENVELOPE SHALL BE SEALED WITH A GASKET OR CAULK BETWEEN THE HOUSING AND THE INTERIOR WALL OR CEILING COVERING TO LIMIT AIR LEAKAGE BETWEEN CONDITIONED AND UNCONDITIONED SPACES, PER SECTION 1102.4.5
3. DUCTWORK ON EXTERIOR WALLS IF REQUIRED SHALL BE INSULATED TO A MINIMUM OF R-6 PER 1103.2.1
4. MECHANICAL VENTILATION PER SECTION N1103.6 TO BE MET WITH CONTINUOUS USE EXHAUST FANS AND MAKE-UP AIR CONTROLS, PER SECTION M507.3.3 REQUIREMENT.
5. MECHANICAL VENTILATION FAN EFFICACY SHALL MEET MINIMUM REQUIREMENTS PER SECTION N1103.6.1.

BASIC DESIGN CRITERIA

1. GROUND SNOW LOAD - 40 PSF R301.2 (5)
2. WIND SPEED - 115 MPH, EXPOSURE B R301.2.1
3. SEISMIC DESIGN CATEGORY - A R301.2 (2)
4. WEATHERING - SEVERE
5. FROST LINE DEPTH - 48"
6. TERMITE DAMAGE - NONE TO SLIGHT
7. DECAY DAMAGE - NONE TO SLIGHT
8. WINTER DESIGN TEMPERATURE - 1
9. ICE SHIELD UNDERLAYMENT REQUIRED - YES
10. FLOOD HAZARD - FIRM - 1992
11. ROOF TIE DOWN REQUIREMENTS R802.11.1

GARAGE STORAGE ADDITION

DAN GILMORE RESIDENCE

31 FALCON TRAIL PITTSFORD, NY

MORABITO ARCHITECTS

PATRICK J. MORABITO, A.I.A. ARCHITECT, P.C.
LICENSED IN CO, MA, ME, NV, NY, PA, SC

121 Sully's Trail
Pittsford, NY 14534

(585) 264-1330
(585) 264-1333 Fax

www.MorabitoArchitects.com

PROJECT:
GARAGE STORAGE ADDITION
31 FALCON TRAIL
PITTSFORD, NY

CLIENT:
DAN GILMORE

DRAWING:
TITLE PAGE

DRAWN:
PAUL MORABITO

DATE: OCTOBER 2022

SCALE: 1/4" = 1'-0"

JOB NO.: 22PM0422

SHEET:
1
OF 3 SHEETS

REAR ELEVATION

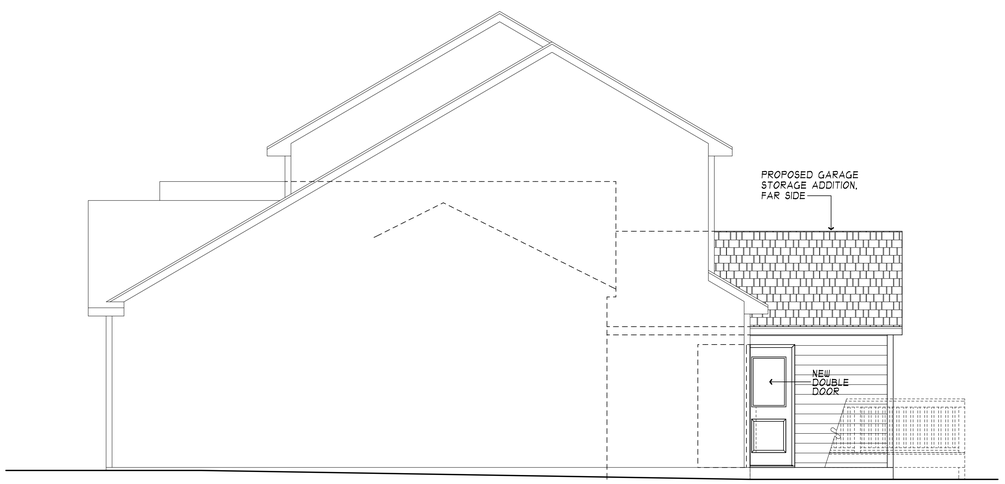

RIGHT SIDE ELEVATION

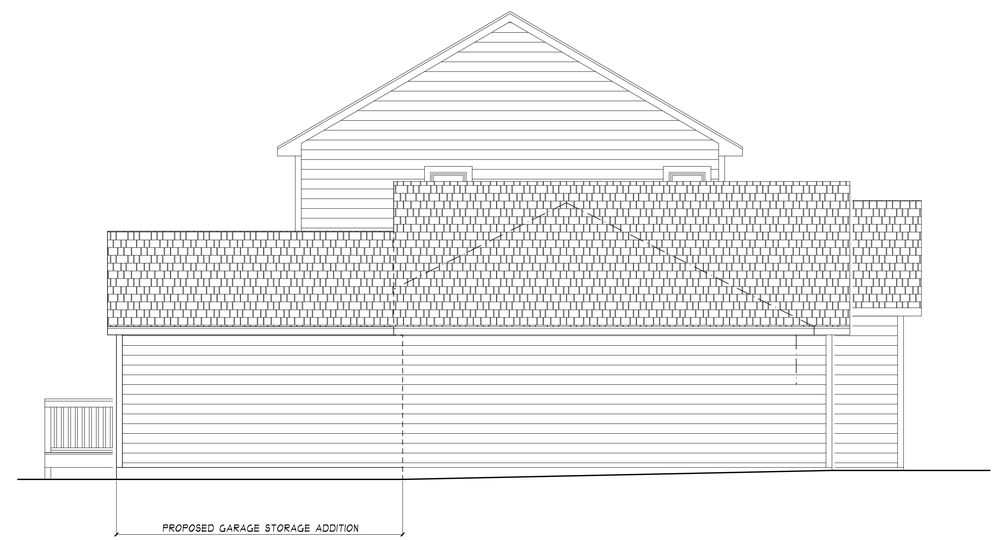

LEFT SIDE ELEVATION

MORABITO ARCHITECTS

PATRICK J. MORABITO, A.I.A. ARCHITECT, P.C.
LICENSED IN CO, MA, ME, NV, NY, PA, SC

121 Sully's Trail
Pittsford, NY 14534

(585) 264-1330
(585) 264-1333 Fax

www.MorabitoArchitects.com

PROJECT:
GARAGE STORAGE ADDITION
91 FALCON TRAIL
PITTSFORD, NY

CLIENT:
DAN GILMORE

DRAWING:
ELEVATIONS- PROPOSED

DRAWN:
PAUL MORABITO

DATE: OCTOBER 2022

SCALE: 1/4" = 1'-0"

JOB NO.: 22PMO422

SHEET:

2

OF 3 SHEETS

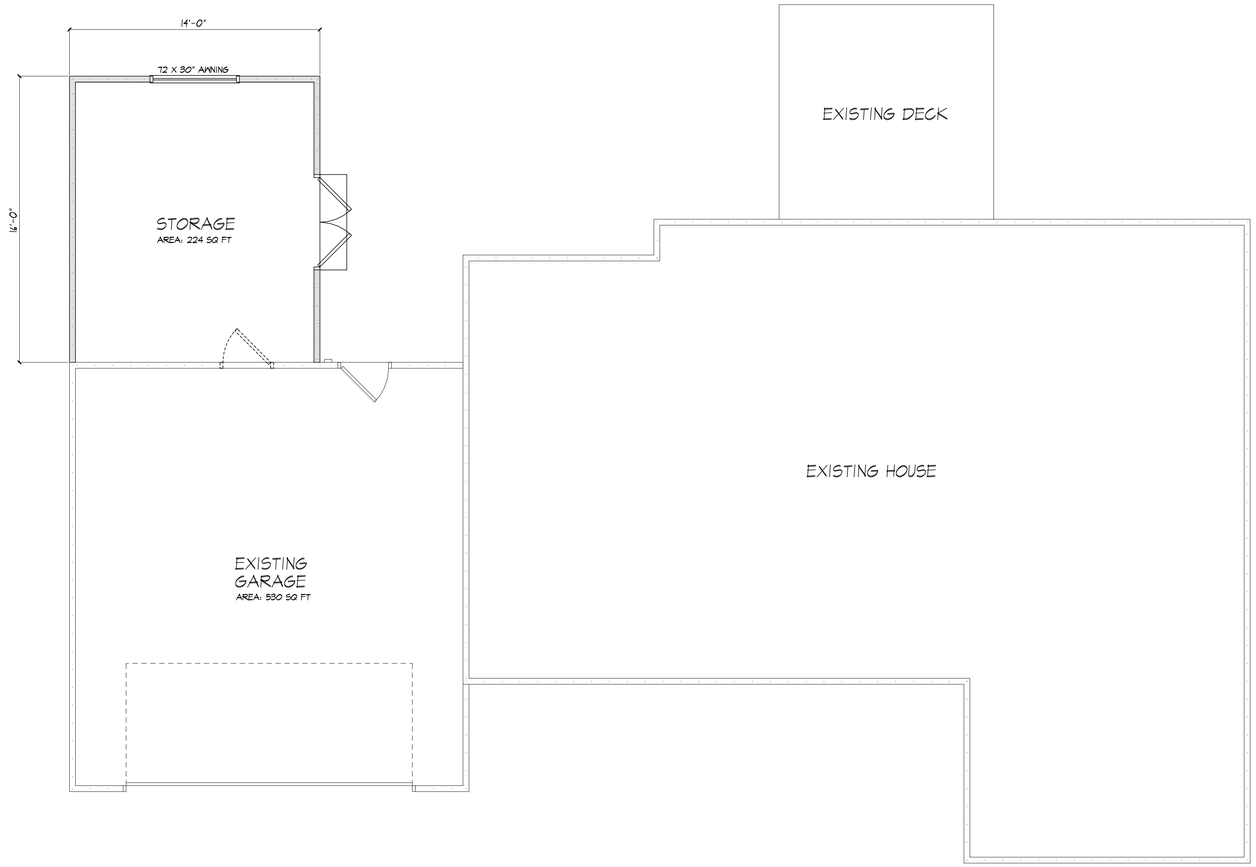

PLAN VIEW

MORABITO
ARCHITECTS

PATRICK J. MORABITO, A.I.A. ARCHITECT, P.C.
LICENSED IN CO, MA, ME, NV, NY, PA, SC

121 Sully's Trail
Pittsford, NY 14534

(585) 264-1330
(585) 264-1333 Fax

www.MorabitoArchitects.com

PROJECT:
GARAGE STORAGE ADDITION
91 FALCON TRAIL
PITTSFORD, NY

CLIENT:
DAN GILMORE

DRAWING:
PLAN VIEW- PROPOSED

DRAWN:
PAUL MORABITO

DATE: OCTOBER 2022

SCALE: 1/4" = 1'-0"

JOB NO.: 22PM0422

SHEET:
3
OF 3 SHEETS

Town of Pittsford

Department of Public Works
11 South Main Street
Pittsford, New York 14534

Phone: 585-248-6250
FAX: 585-248-6262

Permit #
B22-000150

DESIGN REVIEW AND HISTORIC PRESERVATION BOARD
REFERRAL OF APPLICATION

Property Address: 25 Whitestone Lane ROCHESTER, NY 14618
Tax ID Number: 137.20-2-27
Zoning District: RN Residential Neighborhood
Owner: Frank Pecora
Applicant: Frank Pecora

Application Type:

- [x] Residential Design Review §185-205 (B)
- [ ] Commercial Design Review §185-205 (B)
- [ ] Signage §185-205 (C)
- [ ] Certificate of Appropriateness §185-197
- [ ] Landmark Designation §185-195 (2)
- [ ] Informal Review
- [ ] Build to Line Adjustment §185-17 (B) (2)
- [ ] Building Height Above 30 Feet §185-17 (M)
- [ ] Corner Lot Orientation §185-17 (K) (3)
- [ ] Flag Lot Building Line Location §185-17 (L) (1) (c)
- [ ] Undeveloped Flag Lot Requirements §185-17 (L) (2)

Project Description: The applicant is requesting design review for the removal of the side entry to add 42 SF of pantry space to the kitchen.

Meeting Date: October 13, 2022

RN Residential Neighborhood Zoning

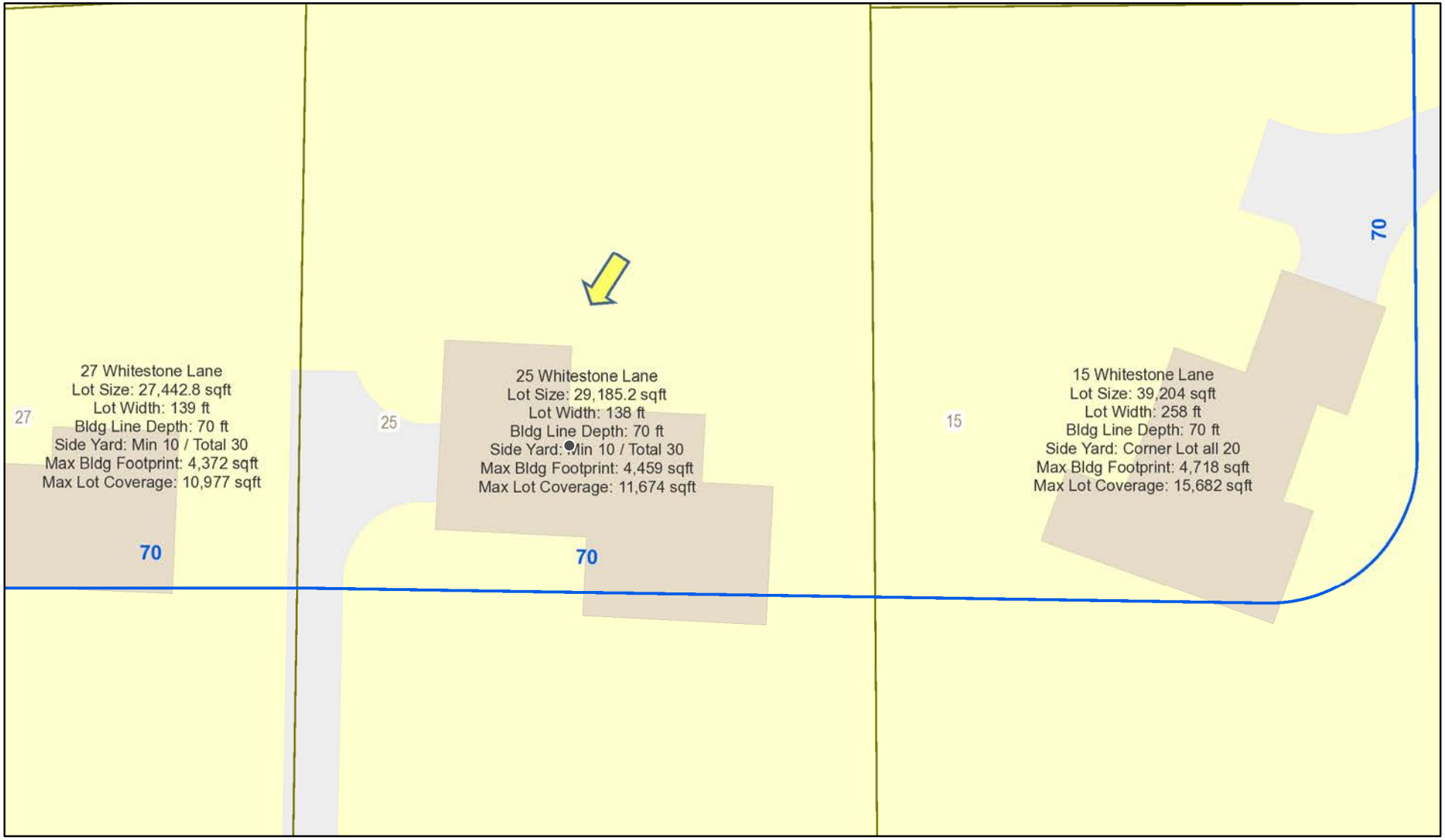

Printed October 5, 2022

1:564

0 20 40 80 ft

0 5 10 20 m

Town of Pittsford GIS


N
Whitestone Ln
Whitestone Ln
Whitestone Ln
Driveway
Malm Ln
04/03/2021
© All EagleView Technology Corporation

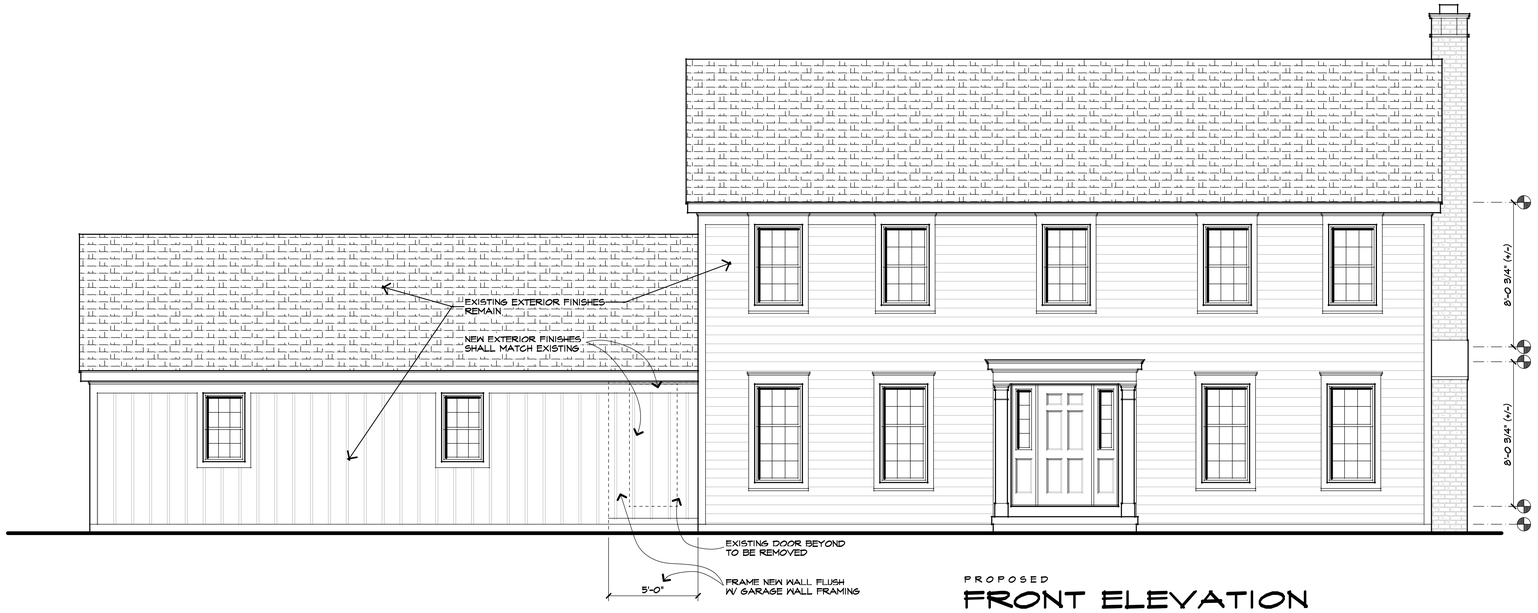

PROPOSED
FRONT ELEVATION
SCALE: 1/4" = 1'-0"

EXISTING
FRONT ELEVATION
SCALE: 1/4" = 1'-0"

UNLESS OTHERWISE NOTED

ROOFING: N/A

ROOF VENTING: ONE SQ.FT. NET PER 300 SQ. FT. ATTIC SPACE (PER EXCEPTION IN R806.2 OF THE CODE.)

FACIA:	N/A
FRIEZEBOARDS:	MATCH EXISTING
CORNERBOARDS:	
CASINGS:	
SIDING:	
EAVE O/HANGS:	N/A
RAKE O/HANGS:	N/A
FOOTING DEPTH:	3'-6" BELOW GRADE
PLATE HEIGHT :	
FIRST FLOOR:	8'-0 3/4" (+/-)
SECOND FLOOR:	8'-0 3/4" (+/-)
WINDOW R.O. HEIGHT:	
FIRST FLOOR:	6'-10 1/2"
SECOND FLOOR:	6'-10 1/2"
WINDOW MFR:	"MARVIN ELEVATE" OR EQUAL

CARINI
ENGINEERING
DESIGNS, P.C.

STEVEN L. CARINI, P.E.

1387 FAIRPORT ROAD
SUITE #560
FAIRPORT, NY 14450-2002

PH. (585) 223-6420

www.carinidesigns.com

Also doing business as
DWELL
@theFingerLakes
LIVE WELL. DO WELL.

61 NORTH MAIN STREET
CANANDAIGUA, NY 14424
PH. 585-223-5687

Revisions:

Project:
EXISTING
SINGLE FAMILY RESIDENCE

Client:
FRANK & BECKY PECORA

Job Location:
25 WHITESTONE LANE
PITTSFORD, NEW YORK

Drawing Title:
ELEVATIONS

Drawn: SMK
Checked By:

Date: SEPTEMBER, 2022

Job No. 38579

Sheet 2 of 5

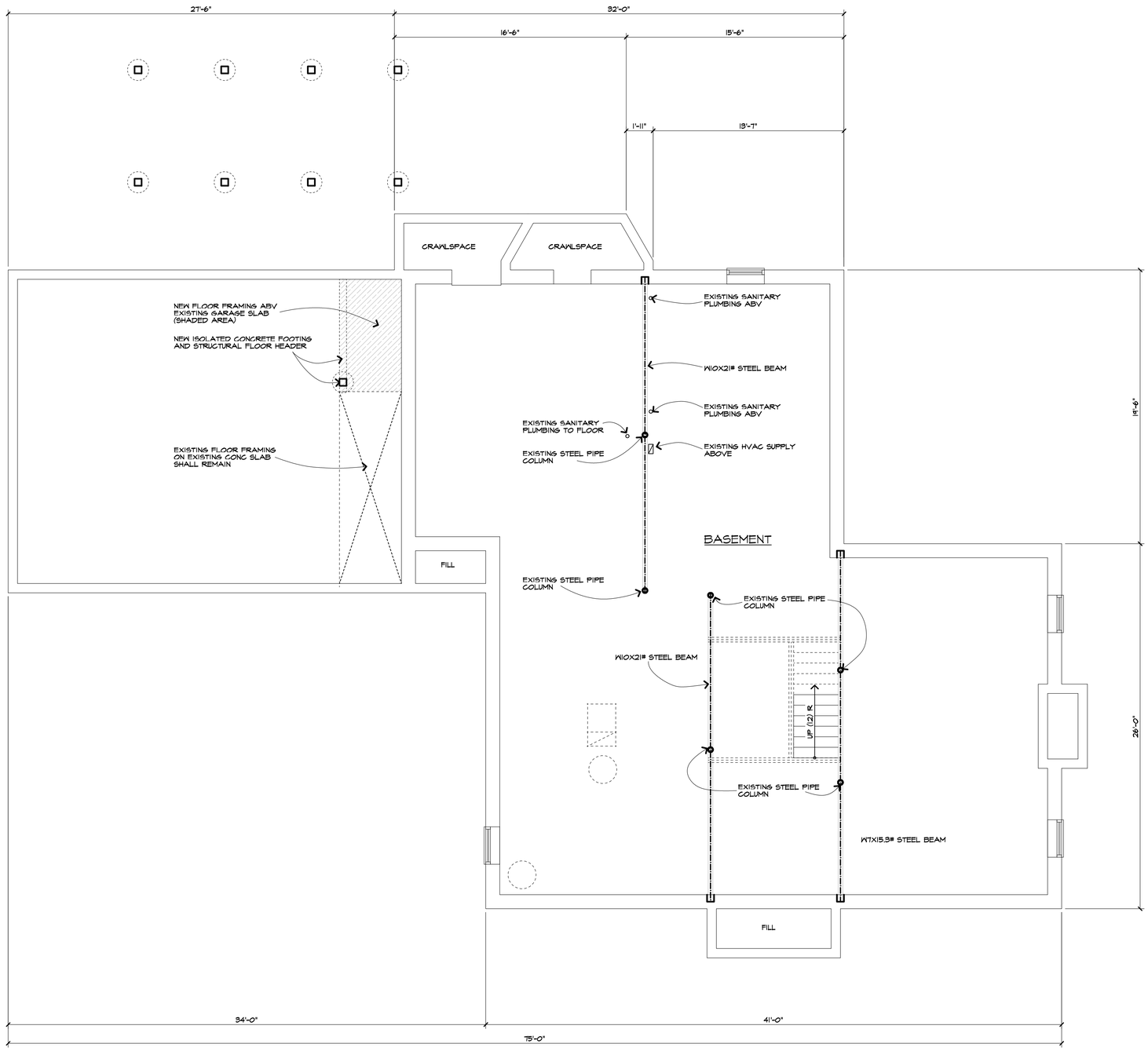

EXISTING

BASEMENT & FOUNDATION PLAN

SCALE: 1/4" = 1'-0"

(11) BLOCK COURSE BASEMENT 12" BLOCK

CARINI ENGINEERING DESIGNS, P.C.

STEVEN L. CARINI, P.E.

1387 FAIRPORT ROAD
SUITE #560
FAIRPORT, NY 14450-2002

PH. (585) 223-6420

www.carinidesigns.com

Also doing business as

DWELL @theFingerLakes

LIVE WELL. DO WELL.

61 NORTH MAIN STREET
CANANDAIGUA, NY 14424
PH. 585-223-5687

Revisions:

Project:
EXISTING
SINGLE FAMILY RESIDENCE

Client:
FRANK & BECKY PECORA

Job Location:
25 WHITESTONE LANE
PITTSFORD, NEW YORK

Drawing Title:
BASEMENT PLAN

Drawn	Checked By
SMK	

Date: SEPTEMBER, 2022

Job No. 38579

Sheet 3 of 5

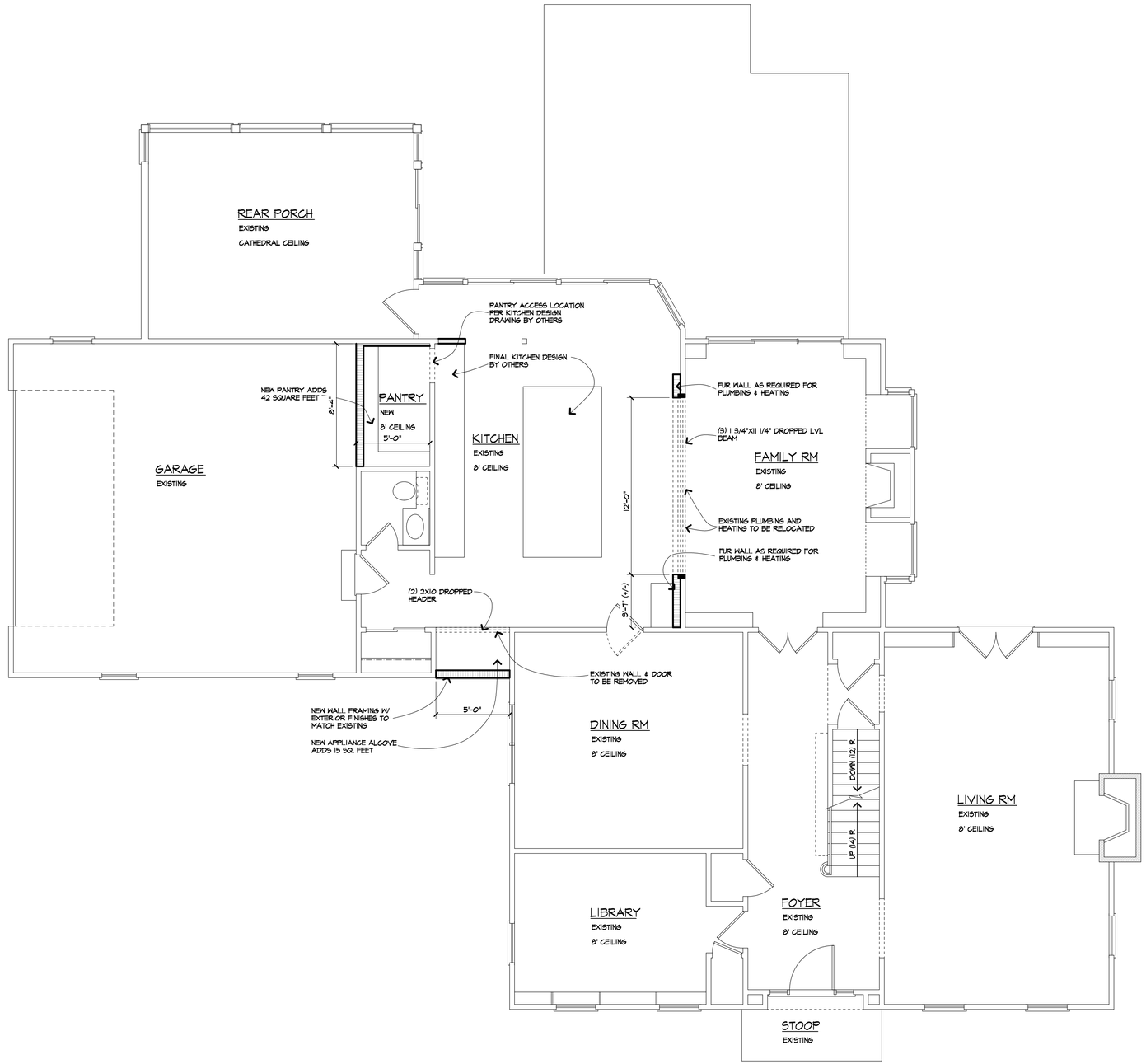

FIRST FLOOR PLAN

SCALE: 1/4" = 1'-0"

HEATED ADDITION AREA = 57 SQUARE FEET

CARINI
ENGINEERING
DESIGNS, P.C.

STEVEN L. CARINI, P.E.

1387 FAIRPORT ROAD
SUITE #560
FAIRPORT, NY 14450-2002

PH. (585) 223-6420

www.carinidesigns.com

Also doing business as
DWELL
@theFingerLakes
LIVE WELL. DO WELL.

61 NORTH MAIN STREET
CANANDAIGUA, NY 14424
PH. 585-223-5687

Revisions:

Project:
EXISTING
SINGLE FAMILY RESIDENCE

Client:
FRANK & BECKY PECORA

Job Location:
25 WHITESTONE LANE
PITTSFORD, NEW YORK

Drawing Title:
FIRST FLOOR PLAN

Drawn	Checked By
SMK	

Date: SEPTEMBER, 2022

Job No. 38579

Sheet 4 of 5


Door area to be enclosed
Reworked brick walk

Town of Pittsford

Department of Public Works
11 South Main Street
Pittsford, New York 14534

Phone: 585-248-6250
FAX: 585-248-6262

Permit #
B22-000152

DESIGN REVIEW AND HISTORIC PRESERVATION BOARD
REFERRAL OF APPLICATION

Property Address: 4035 East Avenue ROCHESTER, NY 14618
Tax ID Number: 151.06-1-21
Zoning District: RN Residential Neighborhood
Owner: Michael Devin
Applicant: Michael Devin

Application Type:

- [x] Residential Design Review §185-205 (B)
- [ ] Commercial Design Review §185-205 (B)
- [ ] Signage §185-205 (C)
- [ ] Certificate of Appropriateness §185-197
- [ ] Landmark Designation §185-195 (2)
- [ ] Informal Review
- [ ] Build to Line Adjustment §185-17 (B) (2)
- [ ] Building Height Above 30 Feet §185-17 (M)
- [ ] Corner Lot Orientation §185-17 (K) (3)
- [ ] Flag Lot Building Line Location §185-17 (L) (1) (c)
- [ ] Undeveloped Flag Lot Requirements §185-17 (L) (2)

Project Description: Applicant is requesting design review for the construction of a covered front porch.

Meeting Date: October 13, 2022

RN Residential Neighborhood Zoning

Printed February 3, 2022

1:1,128

0 45 90 180 ft

0 12.5 25 50 m

Town of Pittsford GIS


28
4035
30
4040
4030
4028
4016

REFERENCES:

FIRST AMERICAN TITLE INSURANCE COMPANY #471994 DATED SEPT. 24, 2021
LIBER 7788 OF DEEDS, PAGE 125
LIBER 53 OF MAPS, PAGE 8

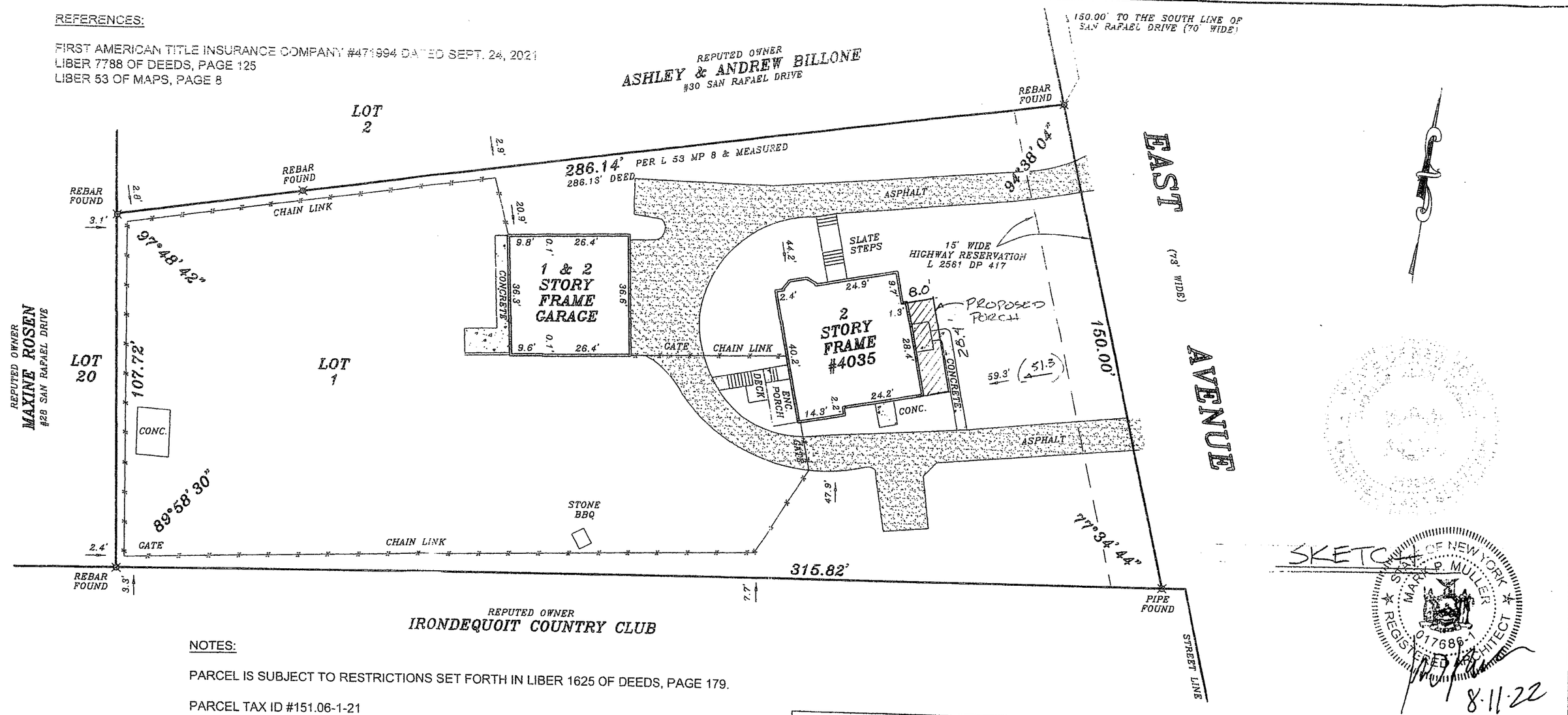

SKETCH

MARK P. MULLER
017686-1
REGISTERED ARCHITECT
STATE OF NEW YORK
8-11-22

NOTES:

PARCEL IS SUBJECT TO RESTRICTIONS SET FORTH IN LIBER 1625 OF DEEDS, PAGE 179.

PARCEL TAX ID #151.06-1-21

WE, O'NEILL-RODAK LAND SURVEYING ASSOCIATES, P.C., CERTIFY TO:
1. MICHAEL DEVINE & WENDY DEVINE
2. HANDELMAN, WITKOWICZ & LEVITSKY
3. CHICAGO TITLE INSURANCE COMPANY

THAT THIS MAP WAS PREPARED FROM NOTES OF AN INSTRUMENT SURVEY COMPLETED OCTOBER 11, 2021.

THOMAS A. RODAK, P.L.S. #050246

O'NEILL-RODAK
LAND SURVEYING ASSOCIATES, P.C.

LAND SURVEYORS - PLANNERS
BOUNDARY CONSULTANTS
FLOOD ZONE DETERMINATIONS
ALTA/NSPS SURVEYS

5 SOUTH FITZHUGH STREET
ROCHESTER, NY
14614
PHONE (585) 325-7520 FAX (585) 325-1708
e-mail surveyors@oneillrodak.com

MAP OF A SURVEY

LOT 1
OVERBROOK SUBDIVISION

TOWN OF PITTSFORD

MONROE COUNTY, NEW YORK

CLIENT	UNDERBERG & KESSLER LLP	
SCALE	DATE	PROJECT NO.
1" = 30'	05/08/2017 REDATED 10/18/2021	2017-0499

MARK P. MULLER
ARCHITECT
3509 Taft Road
Bloomfield, NY 14469
Tel 657-6905

EAST ELEVATION
1/4"=1'-0

4035 EAST AVE

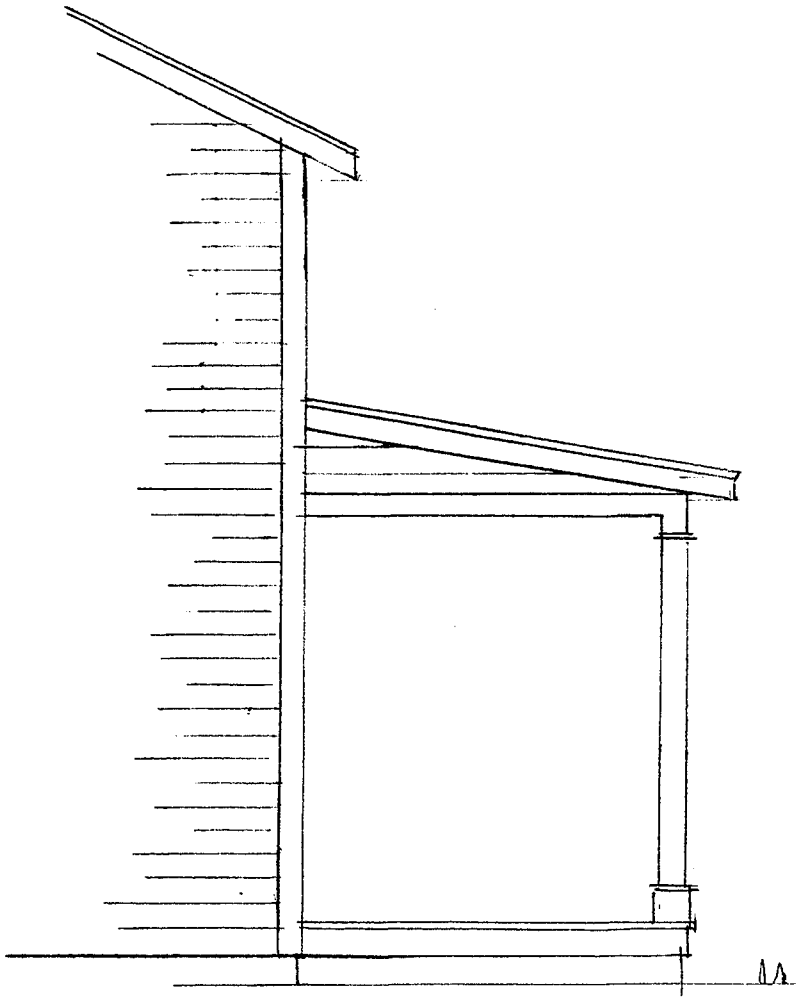

SOUTH ELEV.

1/4"=1'-0

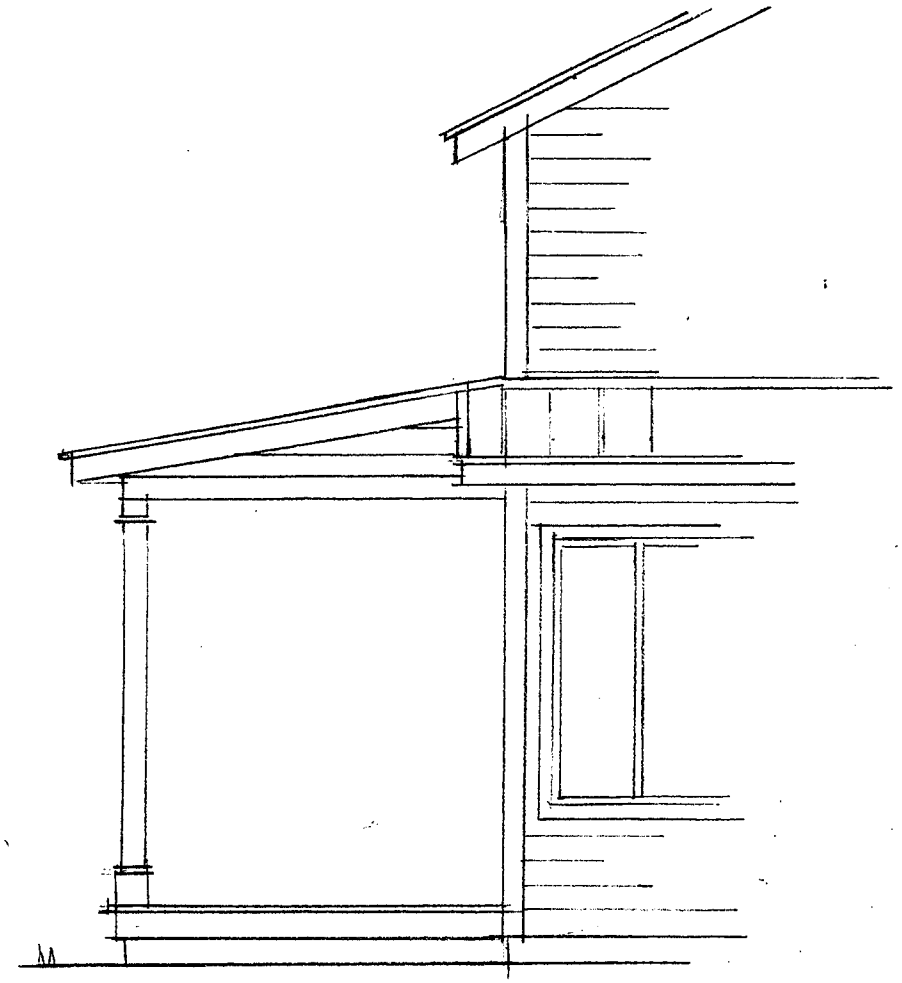

NORTH ELEV.

1/4"=1'-0

Town of Pittsford

Department of Public Works
11 South Main Street
Pittsford, New York 14534

Phone: 585-248-6250
FAX: 585-248-6262

Permit #
B22-000146

DESIGN REVIEW AND HISTORIC PRESERVATION BOARD
REFERRAL OF APPLICATION

Property Address: 19 High Street PITTSFORD, NY 14534
Tax ID Number: 151.14-1-59.1
Zoning District: RN Residential Neighborhood
Owner: Imburgia, Samuel J
Applicant: Gerber Homes & Additions LLC

Application Type:

- [x] Residential Design Review §185-205 (B)
- [ ] Commercial Design Review §185-205 (B)
- [ ] Signage §185-205 (C)
- [ ] Certificate of Appropriateness §185-197
- [ ] Landmark Designation §185-195 (2)
- [ ] Informal Review
- [ ] Build to Line Adjustment §185-17 (B) (2)
- [ ] Building Height Above 30 Feet §185-17 (M)
- [ ] Corner Lot Orientation §185-17 (K) (3)
- [ ] Flag Lot Building Line Location §185-17 (L) (1) (c)
- [ ] Undeveloped Flag Lot Requirements §185-17 (L) (2)

Project Description: Applicant is requesting design review for the construction of a one story single family home. The home will be approximately 2070 square feet including the garage

Meeting Date: October 13, 2022

RN Residential Neighborhood Zoning

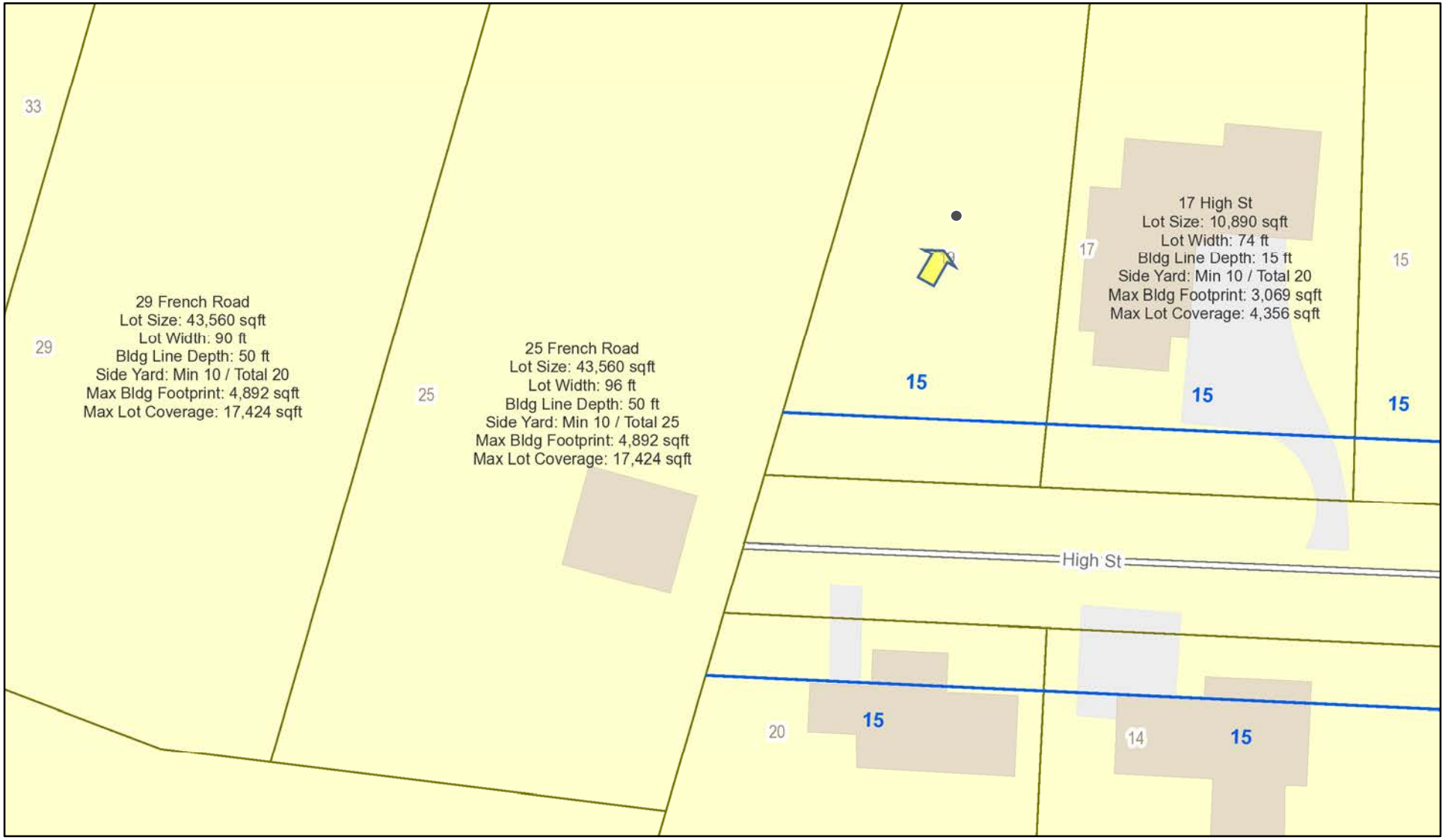

Printed October 4, 2022

1:564

0 20 40 80 ft

0 5 10 20 m

Town of Pittsford GIS


N
04/03/2021
High St
© All EagleView Technology Corporation

Kosinski Residence

Town of PITTSFORD, NEW YORK

STRUCTURAL LOADING DESIGN CRITERIA:

- ALL LOADS IN POUNDS PER SQUARE FOOT

LOCATION	LIVE	DEAD	LIMIT
1ST FLOOR		15	L/360
2ND FLOOR (SLEEPING)	30	10	L/360
2ND FLOOR (NON-SLEEPING)	40	10	L/360
ATTIC (NO STORAGE)	10	5	L/240
ATTIC (LIGHT STORAGE)	20	10	L/240
ROOF (W/ FINISHED CLNG.)		20	L/240
ROOF (W/ NO FINISHED CLNG.)		15	L/180
DECKS	50	10	L/360

NOTE: ASSUMED SAFE SOIL BEARING CAPACITY IS 2,000 PSF AT MIN. FROST DEPTH. VALUES MAY BE INCREASED IF SITE SPECIFIC SOIL CLASSIFICATION OR LOAD BEARING TEST DATA IS AVAILABLE.

INSULATION AND FENESTRATION REQUIREMENTS BY COMPONENT:

-TABLE N1102.1.2 2020 RESIDENTIAL CODE
MONROE County

CLIMATE ZONE	FENESTRATION U-FACTOR	SKYLIGHT U-FACTOR	GLAZED FENESTRATION SHGC	CEILING R-VALUE	WOOD FRAME WALL R-VALUE	MASS WALL R-VALUE	FLOOR R-VALUE	BASEMENT WALL R-VALUE	SLAB R-VALUE DEPTH	CRAWL SPACE WALL R-VALUE
5	0.30	0.55	NR	49	20 OR 13 + 5	13 /17	30	15 / 19	10 / 2 ft HEATED SLAB 5	15 / 19

CLIMATIC & GEOGRAPHICAL DESIGN CRITERIA:

-TABLE R301.2(1) 2020 RESIDENTIAL CODE

GROUND SNOW LOAD	WIND SPEED (mph)	SEISMIC DESIGN CATEGORY	SUBJECT TO DAMAGE FROM				ICE SHIELD UNDERLAYMENT REQUIRED	FLOOD HAZARDS
			WEATHERING	FROST LINE DEPTH	TERMITE	DECAY		
40	115	B	SEVERE	42"	SLIGHT TO MODERATE	NONE TO SLIGHT	YES	NO

LIST OF DRAWINGS:

GENERAL NOTES & CODE

GENERAL NOTES:

1. THIS SET OF PLANS HAS BEEN DESIGNED AND SHALL BE BUILT TO COMPLY WITH THE RESIDENTIAL CODE OF NYS AND MEETS OR EXCEEDS THE NYS ENERGY CONSERVATION CONSTRUCTION CODE. IN ADDITION, CONSTRUCTION SHALL COMPLY WITH ALL LOCAL, STATE AND FEDERAL CODES AND REGULATIONS.
2. GENERAL CONTRACTOR IS RESPONSIBLE FOR MEANS, METHODS, TECHNIQUES, SEQUENCE AND SAFETY ISSUES IN REFERENCE TO THE CONSTRUCTION CONTRACT.
3. GENERAL CONTRACTOR TO VERIFY ALL EXISTING CONDITIONS, REQUIREMENTS, NOTES, AND DIMENSIONS PRIOR TO START OF CONSTRUCTION. ANY DISCREPANCIES SHALL BE BROUGHT TO THE ATTENTION OF THE ARCHITECT.
4. GENERAL CONTRACTOR TO PROVIDE ADEQUATE SUPPORT OF EXISTING FOUNDATION WALLS, LOAD BEARING WALLS AND PARTITIONS DURING DEMOLITION (IF APPLICABLE TO PROJECT) AND CONSTRUCTION.
5. ALL PRE-ENGINEERED ROOF & FLOOR SYSTEMS AND THEIR BLOCKING/BRACING TO BE CERTIFIED BY THE MANUFACTURER.
6. CONTRACTOR IS RESPONSIBLE FOR COORDINATING WORK WITH OTHER TRADES WHEREVER THEY OVERLAP.
7. WHEN MATERIALS AND/OR FINISHES ARE FOUND TO BE ABSENT, OR WHEN EXISTING CONSTRUCTION IS REMOVED, DISTURBED, DAMAGED, REPLACED OR RENOVATED IN ANY WAY, CONTRACTOR SHALL PROVIDE PATCHING AND PAINTING WITH MATERIALS OF SAME TYPE AND QUALITY AS TO MATCH ADJACENT EXISTING SURFACES UNLESS OTHERWISE NOTED.
8. PROVIDE ALL BLOCKING, FURRING AND SHIMMING AS NECESSARY FOR INSTALLATION AND COMPLETION OF THE WORK.
9. ALL NEW WORK SHALL BE PLUMB, LEVEL AND SQUARE, SCRIBE AND MAKE FIT ALL NEW WORK TO EXISTING (IF APPLICABLE TO PROJECT).
10. ALL DETAILS ARE SUBJECT TO CHANGE DUE TO EXISTING FIELD CONDITIONS. CONTRACTOR MUST NOTIFY OWNER AND ARCHITECT IF SO.
11. COORDINATE INTERIOR DOORS/HARDWARE, WOOD TRIM AND FINISHES, AND EXTERIOR FINISH MATERIALS (SIDING, ROOFING, ETC.) TO MATCH EXISTING (IF APPLICABLE TO PROJECT). FINAL SELECTIONS BY OWNER AND GENERAL CONTRACTOR, UNLESS OTHERWISE SPECIFIED.
12. COORDINATE THE INSTALLATION OF CONTINUOUS ALUMINUM GUTTERS AND DOWNSPOUTS TO MATCH EXISTING (IF APPLICABLE TO PROJECT). DOWNSPOUTS NOT LOCATED ON DRAWINGS ARE TO BE LOCATED IN FIELD AND APPROVED BY OWNER. ALL DOWNSPOUTS ARE TO RUN TO PRECAST CONCRETE SPASHBLOCKS, OR TO UNDERGROUND CONDUCTORS PER LOCAL CODE.
13. GENERAL CONTRACTOR IS RESPONSIBLE FOR COORDINATION OF ALL SITEWORK, INCLUDING FINISH GRADING AND HYDROSEEDING.
14. GENERAL CONTRACTOR IS RESPONSIBLE FOR COORDINATION OF ELECTRIC, PLUMBING AND HVAC SYSTEM INSTALLATION. VERIFY CAPACITY AND LOCATION OF EXISTING UTILITIES/SERVICES PRIOR TO CONSTRUCTION (IF APPLICABLE TO PROJECT).
15. THESE DOCUMENTS DO NOT PURPORT TO SHOW ALL MEANS AND METHODS REQUIRED FOR A COMPLETE INSTALLATION. THE INTENT IS TO INDICATE THE GENERAL SCOPE FOR THE PROJECT. IN TERMS OF THE ARCHITECTURAL DESIGN CONCEPT, THE LOCATION/DIMENSIONS OF THE CONSTRUCTION AND MAJOR ARCHITECTURAL ELEMENTS OF CONSTRUCTION.

CODE REQUIREMENTS:

STAIRS: PER IRC R311.7

1. STAIR TO HAVE HEIGHTS FIELD VERIFIED AND SHOP DRAWINGS APPROVED PRIOR TO FABRICATION. STAIR CONSTRUCTION SHALL CONSIST OF STRINGERS, ¾" THICK TREADS AND ¾" THICK RISERS OR MATERIALS FABRICATED BY A COMPONENT MANUFACTURER.
2. STAIRWELLS TO BE A MIN. OF 36" IN WIDTH AND HAVE A CONSISTENT HEAD HEIGHT TO FINISHED CEILING OF 6'-8" FROM THE TREAD NOSING.
3. CLOSED RISERS WITH 1" NOSING UNLESS NOTED OTHERWISE. MAX. RISER HEIGHT OF 7 ¾" AND MIN. TREAD DEPTH OF 10" (R" MIN. RUN DEPTH).
4. A LANDING IS NOT REQUIRED AT TOP OF INTERIOR STAIRS PROVIDED A DOOR DOES NOT SWING OVER STAIR.

HANDRAILS: PER IRC

1. HANDRAILS ARE REQUIRED ON AT LEAST ONE (1) SIDE OF STAIRWAYS FOR (4) OR MORE RISERS.
2. HANDRAILS AND EXTENSIONS SHALL BE 34" TO 38" ABOVE NOSING OF TREADS AND BE CONTINUOUS.
3. THE HANDGRIP PORTION OF ALL HANDRAILS SHALL BE NOT LESS THAN 1 ¼" NOR MORE THAN 2" IN CROSS-SECTIONAL DIMENSION.
4. HANDRAILS PROJECTING FROM A WALL SHALL HAVE AT LEAST 1 ½" BETWEEN THE WALL AND THE HANDRAIL. ENDS OF THE HANDRAILS SHALL BE RETURNED OR SHALL HAVE ROUNDED TERMINATION OR BENDS.

GUARDRAILS: PER IRC

1. PORCHES, BALCONIES, AND RAISED FLOORS GREATER THAN 30" ABV. FLR. OR GRADE SHALL HAVE A HALF WALL OR RAIL (GUARD 36" MIN. HT.
2. ON OPEN STAIRWAYS SHALL HAVE A GUARDRAIL HEIGHT OF 34" TO 38" ABOVE NOSING OF TREADS AND BE CONTINUOUS.
3. OPENINGS BETWEEN RAILINGS SHALL BE LESS THAN 4". THE TRIANGULAR OPENINGS FORMED BY THE RISER, TREAD AND BOTTOM ELEMENT OF A GUARDRAIL AT A STAIR SHALL BE LESS THAN 6".

GLAZING:

1. GLAZING TO BE TEMPERED WHEN CONSIDERED A HAZARDOUS LOCATION AS DEFINED IN THE RESIDENTIAL CODE OF NYS SUCH AS:
   - GLAZING IN DOORS
   - GLAZING ADJACENT TO DOORS - WITHIN 24" OF A DOOR, WHEN BOTTOM EDGE IS LESS THAN 60" AFF.
   - GLAZING IN WINDOWS - WHEN INDIVIDUAL PANE IS GREATER THAN 9 SF, BOTTOM EDGE IS LESS THAN 18" AFF, TOP EDGE IS GREATER THAN 36" AFF, AND WALKING SURFACE IS WITHIN 36".
   - GLAZING I WET SURFACES - ANY GLAZING IN WALLS SURROUNDING TUBS, SHOWERS, SAUNAS WHERE BOTTOM EDGE IS LESS THAN 60" AFF
   - GLAZING ADJACENT TO STAIRWAYS AND RAMPS - BOTTOM EDGE OF GLAZING IS LESS THAN 60" AFF.
   - THE MAXIMUM ALLOWABLE U-FACTOR FOR ALL NEW EXTERIOR DOORS AND WINDOWS SHALL BE 0.30. THE MAXIMUM ALLOWABLE U-FACTOR FOR SKYLIGHTS SHALL BE .55

ELECTRICAL/ MECHANICAL/ PLUMBING:

1. ELECTRIC AND PLUMBING LAYOUT SHALL MEET OR EXCEED LOCAL & NATIONAL CODES AND SHALL BE INSPECTED DURING CONSTRUCTION.
2. EQUIPMENT AND APPLIANCES HAVING AN IGNITION SOURCE SHALL BE ELEVATED SUCH THAT THE IGNITION IS NOT LESS THAN 18 INCHES ABOVE THE FLOOR IN HAZARDOUS LOCATIONS AND PRIVATE GARAGES. APPLIANCES LOCATED IN PRIVATE GARAGES SHALL BE INSTALLED WITH A MINIMUM CLEARANCE OF 6 FEET ABOVE THE FLOOR OR PROVIDE PROTECTION FROM MOTOR VEHICLE IMPACT. PER THE RESIDENTIAL CODE OF N.Y.S.
3. WHERE WALL AND/OR CEILING FINISHES ARE REMOVED TO EXPOSE THE STRUCTURE, ALARMS SHALL BE HARD-WIRED. OTHER ALARMS MAY BE BATTERY OPERATED
4. AT LEAST ONE RECEPTACLE OUTLET SHALL BE INSTALLED IN EACH ATTACHED GARAGE, AND IN EACH DETACHED GARAGE THAT IS PROVIDED WITH ELECTRICAL POWER.
5. IF AN AUTOMATIC GARAGE DOOR OPENER IS PROVIDED IT SHALL BE LISTED IN ACCORDANCE WITH UL 325

SMOKE/CARBON MONOXIDE ALARMS:

1. FOR NEW CONSTRUCTION SMOKE DETECTING ALARM DEVICES SHALL BE DIRECT WIRED AND CONFORM TO THE RESIDENTIAL CODE OF N.Y.S.
   - IN EACH SLEEPING ROOM
   - IN HALLWAYS ADJACENT TO SLEEPING ROOMS
   - AT LEAST ONE ON EACH STORY INCLUDING BASEMENT
   - SHALL NOT BE INSTALLED LESS THAN 3 FEET HORIZONTALLY FROM THE DOOR OF OPENING OF A BATHROOM THAT CONTAINS A BATHTUB OR SHOWER.
2. FOR NEW CONSTRUCTION CARBON MONOXIDE DETECTORS SHAL CONFORM TO THE RESIDENTIAL CODE OF N.Y.S. AND CONFORM TO THE FIRE CODE OF N.Y.S. SHALL BE DIRECT WIRED AND SHALL BE INSTALLED ON ANY STORY HAVING A SLEEPING AREA, WITHIN 10 FEET OF THE SLEEPING AREA. - IN ANY ROOM WHERE FUEL-FIRED APPLIANCES OR EQUIPMENT, SOLID-FUEL BURNING APPLIANCES AND EQUIPMENT, OR FIREPLACES ARE LOCATED. CARBON MONOXIDE ALARMS SHALL BE LISTED IN ACCORDANCE WITH UL 2034. COMBINATION CARBON MONOXIDE AND SMOKE ALARMS SHALL BE LISTED IN ACCORDANCE WITH UL 2034 AND UL 217 AND SHALL BE INSTALLED IN ACCORDANCE WITH MANUFACTURER'S INSTRUCTIONS

DYER DUCT/EXHAUST:

1. DRYER EXHAUST DUCTS SHALL HAVE A SMOOTH INTERIOR FINISH AND BE CONSTRUCTED OF METAL HAVING A MINIMUM THICKNESS OF 0.0157 INCHES (NO. 28 GAGE), AND SHALL BE 4 INCHES NOMINAL IN DIAMETER.
2. EXHAUST DUCTS SHALL TERMINATE ON THE OUTSIDE OF THE BUILDING AS PER MANUFACTURER'S INSTALLATION INSTRUCTIONS, BUT NOT LESS THAN 3 FEET IN ANY DIRECTION FROM OPENINGS INTO BUILDINGS.
3. THE MAXIMUM LENGTH OF A CLOTHES DRYER EXHAUST DUCT SHALL NOT EXCEED 35 FEET FROM THE DRYER LOCATION TO THE OUTLET TERMINAL. WHERE FITTINGS ARE USED, THE MAXIMUM LENGTH OF THE DUCT SHALL BE REDUCED AS PER THE RESIDENTIAL CODE OF NEW YORK STATE

ENERGY CONSERVATION STATEMENT:

1. THE PROPOSED BUILDING HAS BEEN DESIGNED TO MEET OR EXCEED THE REQUIREMENTS AND COMPLY WITH THE RESIDENTIAL ENERGY CONSERVATION CODE. INSULATION WILL BE UTILIZED TO SEAL THE BUILDING ENVELOPE, INCLUDING BUT NOT LIMITED TO WALLS, ROOF, RIM JOIST, ABOVE GARAGE FLOORS, CANTILEVERED SPACES AND ALL PERFORATIONS INTO UNCONDITIONED SPACE. BREAKS AND JOINTS IN THE AIR BARRIER WILL BE SEALED WITH FOAM OR CAULK. A VENTILATION CONTROL SYSTEM WILL BE UTILIZED TO PROVIDE THE REQUIRED AIR EXCHANGE.

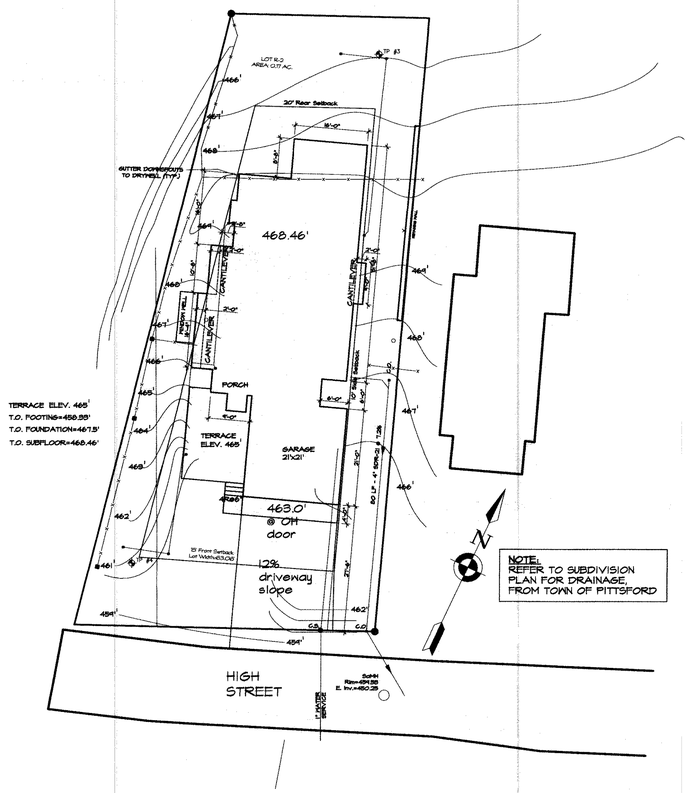

1 A-0.0 SITE PLAN 1/16" = 1'-0"

PERMIT SET

No.	Date	Description

REVISIONS

DESIGN WORKS ARCHITECTURE
6 North Main Street, Suite 104 :: Fairport, New York 14450
Phone: 585-377-9001 :: www.newdesignworks.com

Mark and Mary
KOSINSKI RESIDENCE

19 High Street
Town of Pittsford
Monroe County, New York

Project No. 2141
Date: 9-13-2022
Scale: AS NOTED
Drawn by: AW
Checked by: CBS

Title: Construction Documents COVER SHEET

A-0.0

WINDOW WELL CODE REQUIREMENTS:

1. WINDOW WELLS. WINDOW WELLS REQUIRED FOR EMERGENCY ESCAPE AND RESCUE SHALL HAVE HORIZONTAL DIMENSIONS THAT ALLOW THE DOOR OR WINDOW OF THE EMERGENCY ESCAPE AND RESCUE OPENING TO BE FULLY OPENED. THE HORIZONTAL DIMENSIONS OF THE WINDOW WELL SHALL PROVIDE A MINIMUM NET CLEAR AREA OF 9 SQUARE FEET (0.84 M2) WITH A MINIMUM HORIZONTAL PROJECTION AND WIDTH OF 36 INCHES (914 MM).
2. EXCEPTION: THE LADDER OR STEPS REQUIRED SHALL BE PERMITTED TO ENCROACH A MAXIMUM OF 6 INCHES (152 MM) INTO THE REQUIRED DIMENSIONS OF THE WINDOW WELL.
3. LADDER AND STEPS. WINDOW WELLSWITH A VERTICAL DEPTH GREATER THAN 44 INCHES (1118 MM) BELOW THE ADJACENT GROUND LEVEL SHALL BE EQUIPPED WITH A PERMANENTLY AFFIXED LADDER OR STEPS USABLE WITH THE WINDOW IN THE FULLY OPEN POSITION. LADDERS OR STEPS REQUIRED BY THIS SECTION SHALL NOT BE REQUIRED TO COMPLY WITH R311.5 AND R311.6 LADDERS OR RUNGS SHALL HAVE AN INSIDE WIDTH OF AT LEAST 12 INCHES (305 MM), SHALL PROJECT AT LEAST 3 INCHES (76 MM) FROM THE WALL AND SHALL BE SPACED NOT MORE THAN 18 INCHES (457 MM) ON CENTER VERTICALLY FOR THE FULL HEIGHT OF THE WINDOW WELL.

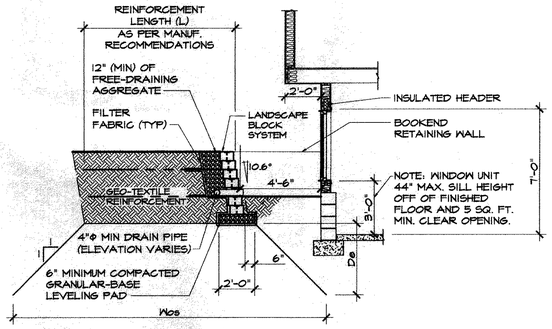

NOTE:
Wos = WIDTH OF OVERSIZING
De = DEPTH OF EXCAVATION
L = LENGTH OF GEO-TEXTILE REINFORCEMENT

Wos = (2 * De) + L + 6"

9 / A-0.1 EMERGENCY EGRESS LANDSCAPED BLOCK SYSTEM

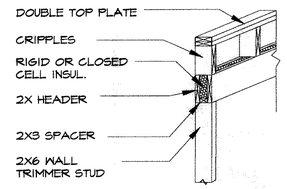

NOTE: ALL EXTERIOR HEADERS TO OUT SIDE WALL

11 / A-0.1 INSULATED HEADERS

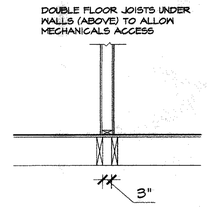

8 / A-0.1 DOUBLE FL. JOISTS

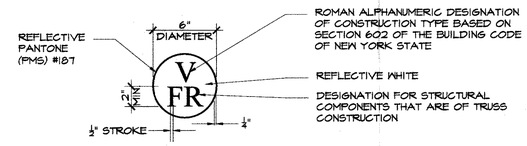

TRUSS IDENTIFICATION SIGN
NOT TO SCALE

"F"	FLOOR FRAMING, INCLUDING GIRDERS AND BEAMS
"R"	ROOF FRAMING
"FR"	FLOOR AND ROOF FRAMING

10 / A-0.1 TRUSS ID

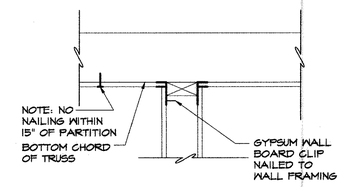

7 / A-0.1 TRUSS UPLIFT DRYWALL CLIP DETAIL

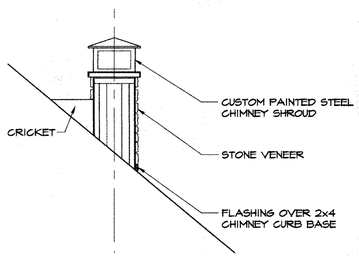

6 / A-0.1 CHIMNEY DETAIL

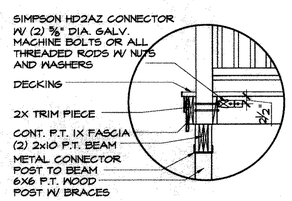

5 / A-0.1 RAILING POST DETAIL

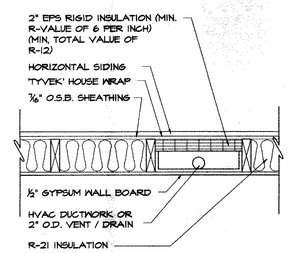

4 / A-0.1 PLUMBING DETAIL AT EXTERIOR WALL

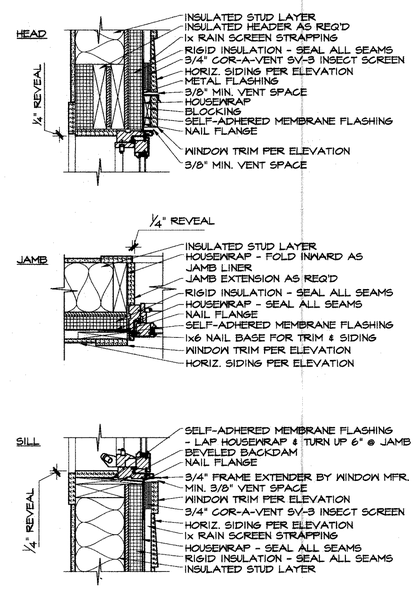

1 / A-0.1 WINDOW DETAILS
1-1/2"= 1'-0"

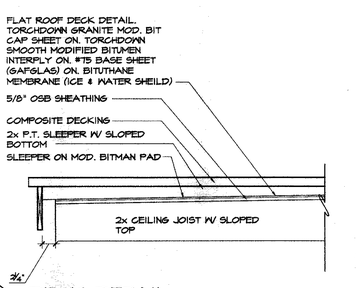

4 / A-0.1 DECK DETAIL

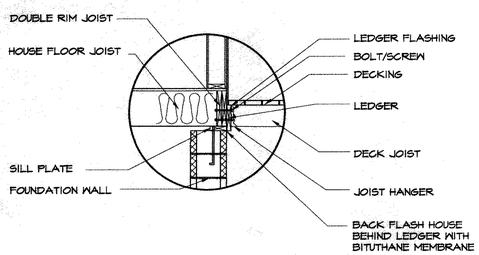

3 / A-0.1 LEDGER ATTACHMENT

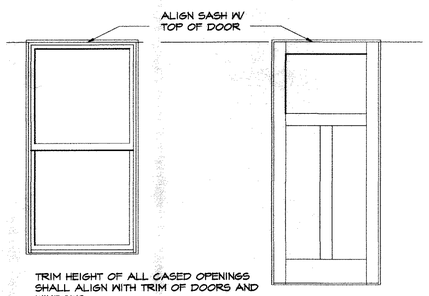

TRIM HEIGHT OF ALL CASED OPENINGS SHALL ALIGN WITH TRIM OF DOORS AND WINDOWS

2 / A-0.1 ALIGN CASED TRIM ELEVATION

PERMIT SET

REVISIONS

No.	Date	Description

DESIGN WORKS ARCHITECTURE
6 North Main Street, Suite 104 :: Fairport, New York 14450
Phone: 585-377-9001 :: www.newdesignworks.com

Mark and Mary
KOSINSKI RESIDENCE

19 High Street
Town of Pittsford
Monroe County, New York

Project No. 2141
Date: 9-13-2022
Scale: AS NOTED
Drawn by: AW
Checked by: CBS

Title: Construction Documents STANDARD DETAILS

A-0.1

FOUNDATION NOTES:

1. ALL CONCRETE TO BE A MIN. OF 3,000 PSI (UNLESS OTHERWISE NOTED).
2. THE HEIGHT OF BACK FILL SHALL NOT EXCEED 8 FEET. BACK FILL MATERIAL SHALL BE CLEAN, FREE OF DEBRIS, WELL DRAINED MATERIAL.
3. FINAL FOOTING DEPTHS AND CONFIGURATIONS ARE SUBJECT TO SUBSURFACE CONDITIONS. ALL FOOTINGS TO REST ON UNDISTURBED SOIL OF MINIMUM BEARING CAPACITY OF 2,000 PSF. ALL FOOTINGS ARE TO EXTEND BELOW THE FROST LINE- MIN. 3'-6" BELOW FINISHED GRADE. PROVIDE STEPPED FOOTINGS WHERE REQUIRED.
4. THE CONCRETE USED FOR FOOTINGS AND FOUNDATION WALLS (NOT EXPOSED TO THE WEATHER) SHALL HAVE A MINIMUM STRENGTH OF 2,500 PSI AND SHALL BE AIR ENTRAINED AS REQUIRED THE RESIDENTIAL CODE OF NEW YORK STATE.
5. TOP OF WALL TO EXTEND A MIN. OF 8" ABOVE FINISHED GRADE.
6. BASEMENT SLAB IS A MINIMUM OF 4" THICK OVER 6 MIL. POLYETHYLENE VAPOR BARRIER OVER 4" CRUSHED STONE. TOP OF SLAB ELEVATION TO BE AS NOTED. BASEMENT SLAB SHALL BE 3,500 P.S.I. (28 DAY COMPRESSIVE STRENGTH) CONCRETE W/ 6x6 10/10 WELDED WIRE MESH REINFORCING.
7. PORCHES, CARPORT SLABS AND STEPS EXPOSED TO WEATHER AND GARAGE SLABS SHALL BE 4,000 P.S.I. (28 DAY COMPRESSIVE STRENGTH) CONCRETE W/ 6x6 10/10 WELDED WIRE MESH REINFORCING.
8. CRAWL SPACE SLAB IS A MINIMUM OF 2" THICK OVER 10 MIL. POLYETHYLENE VAPOR BARRIER OVER 4" CRUSHED STONE. TOP OF SLAB ELEVATION TO BE AS NOTED.
9. UNCONDITIONED CRAWL MUST HAVE VENTILATION OPENINGS COVERED WITH HARDWARE CLOTH OR MESH. ONE (1) SF OF VENTING FOR EVERY 150 SF OF CRAWL SPACE (AT LEAST 1 VENT OPENING MUST BE WITHIN THREE (3) FEET OF EACH CORNER).
10. REQUIRED ACCESS TO CRAWL SPACES IS 18"x24" WHEN IN THE FLOOR AND 16"x24" WHEN ACCESS IS THROUGH THE PERIMETER WALL.
11. PROVIDE PERIMETER FOUNDATION PERFORATED PVC DRAINPIPE PITCHED AT 1/8" IN 12" TO DAYLIGHT OR A PREPARED 1'-0" DEEP, 2'-0" DIAMETER GRAVEL BED OR EXTERIOR SUMP PUMP AS REQUIRED BY OWNER. DRAINPIPE TO BE 4" PERFORATED WITH HOLES ORIENTED DOWNWARD. **SUPERIOR WALL FOUNDATION SYSTEMS SHALL PLACE 4" DIA. PVC SLEEVES AT FOOTING CORNERS TO DRAIN THE INTERIOR CRUSHED STONE.
12. CONTROL JOINTS TO BE PROVIDED FOR AT ALL CONCRETE SLABS OVER 400 SQUARE FEET.
13. PROVIDE DEEP SCORE CONTROL JOINTS AT MIDPOINTS OF ALL GARAGE SLABS, BOTH DIRECTIONS
14. PROVIDE ½" EXPANSION JOINT MATERIAL BETWEEN ALL CONCRETE SLABS ON ABUTTING CONCRETE OR MASONRY WALLS OCCURRING IN EXTERIOR OR UNHEATED INTERIOR AREAS.
15. IT IS REGOMMENDED THAT RADON MITIGATION PIPING BE PLACED UNDER SLAB TO AN ELBOW ABOVE THE SLAB, FOR FUTURE CONNECTION IF NECESSARY.
16. ALL COMPACTED SOIL TO BE COMPACTED IN 12" LIFTS.
17. 2X PRESSURE TREATED SILL PLATES ARE TO RUN FLUSH WITH EXTERIOR EDGE OF FOUNDATION, AND BE SECURED WITH ANCHOR BOLTS (MIN ½" DIA.) SPACED AT 6'-0" O.C. MAXIMUM. ANCHOR BOLTS SHALL EXTEND A MIN. OF 7" INTO MASONRY AND BE LOCATED WITHIN 12" FROM THE END OF EACH PLATE SECTION. SILL PLATES ARE TO BE PLACED OVER CLOSED CELL FOAM SILL SEALER.
18. CMU FOUNDATION WALL SYSTEM - SEE CMU NOTES & TYPICAL DETAILS.
19. PROVIDE TERMITE PROTECTION AS REQUIRED BY LOCAL CODES.
20. SEALABLE COVER SUMP IS NEEDED IF SOIL OTHER THAN GROUP 1 (TABLE 405.1). SUMP TO BE 24" BELOW THE BOTTOM OF THE BASEMENT FLOOR. SUMP TO DISCHARGE BY GRAVITY OR MECHANICAL MEANS INTO AN APPROVED DRAINAGE SYSTEM.
21. EXCEPT WHERE REQUIRED TO BE WATERPROOFED BY SECTION R406.2, FOUNDATION WALLS THAT RETAIN EARTH AND USABLE SPACE, SHALL BE DAMPROOFED FROM TOP OF FOOTING TO FINISHED GRADE WITH A BITUMINOUS-BASED COATING OR OTHER APPROVED DAMPROOFING MATERIAL.
22. BUILDER TO VERIFY ALL SOIL CONDITIONS BEFORE CONSTRUCTING FOUNDATION. IF POOR CONDITIONS ARE DISCOVERED CONTACT DESIGN WORKS ARCHITECTURE.
23. BUILDER TO VERIFY FOUNDATION DETAILS W/ LOCAL BUILDING CODES.
24. MASONRY VENEER MUST BE ANCHORED TO BACK-UP CONSTRUCTION WITH GALVANIZED CORRUGATED METAL TIES SPACED 16" O.C. HORIZONTALLY AND 24" VERTICALLY. INSTALL CONTINUOUS APPROVED FLASHING AND COTTON CORD WEEPS AT 48" O.C. WITHIN FIRST EXPOSED COURSE OF MASONRY VENEER ABOVE GRADE.

CAST-IN-PLACE CONCRETE AND REINFORCING:

1. BEFORE PLACING CONCRETE REFER TO ARCHITECTURAL, MECHANICAL AND ELECTRICAL DRAWINGS FOR BLOCKOUTS AND EMBEDDED ITEMS.
2. CHAMFER ALL EXPOSED EDGES OF CONCRETE ¾"x 45 DEGREES UNLESS OTHERWISE NOTED.
3. ALL ANCHOR BOLTS ARE TO BE SET WITH TEMPLATES. ANCHOR BOLT PROJECTIONS NOTED OR SHOWN ON DRAWINGS SHALL BE MEASURED FROM ROUGH CONCRETE AND NOT FROM GROUT.
4. ALL REINFORCING STEEL SHALL BE CONTINUOUS AROUND CORNERS.
5. WELDING OF REINFORCING STEEL IS NOT PERMITTED.
6. THE USE OF DEFORMED REINFORCING STEEL OR ANCHORS ON EMBEDDED ITEMS IS NOT PERMITTED.
7. SLABS ON GRADE SHALL BE REINFORCED WITH ONE LAYER 6X6 W2.9xW2.9 WELDED WIRE MESH.
8. THE FOLLOWING MINIMUM PROTECTION OF REINFORCING SHALL BE MAINTAINED.
   - FOOTINGS 3"
   - CONCRETE EXPOSED TO EARTH OR WEATHER 2"
   - WALLS 1½"
   - SLABS ¾"

C.M.U. NOTES:

1. CONCRETE MASONRY UNITS - HOLLOW LOAD BEARING CONCRETE BLOCK SHALL BE 8"x16" NOMINAL FACE WITH THICKNESS AS SHOWN ON DRAWINGS.
2. MORTAR - MORTAR SHALL BE TYPE S.
3. TRUSSED HORIZONTAL REINFORCING SHALL BE PROVIDED AT 16" O.C. HORIZONTALLY.
4. BLOCKS SHALL BE LAID IN REGULAR BOND PATTERN WITH JOINTS OF ⅜" UNIFORM THICKNESS.
5. WHERE VERTICAL REINFORCING IS CALLED FOR ON PLANS FILL CELLS FULL HEIGHT WITH CONCRETE OF SPECIFIED STRENGTH.
6. ALL ANCHOR BOLTS TO BE SET IN MASONRY SHALL BE SET WITH TEMPLATES. ANCHOR BOLT PROJECTIONS SHOWN OR NOTED ON DRAWINGS SHALL BE MEASURED FROM TOP OF BLOCK AND NOT FROM GROUT.

TILE SPECIFICATION:

1. USE UNMODIFIED MORTAR FOR SETTING TILE OVER AN IMPERMEABLE WATERPROOF MEMBRANE OR ANTI-FRACTURE MEMBRANE. DO NOT USE A POLYMER MODIFIED THIN SET.

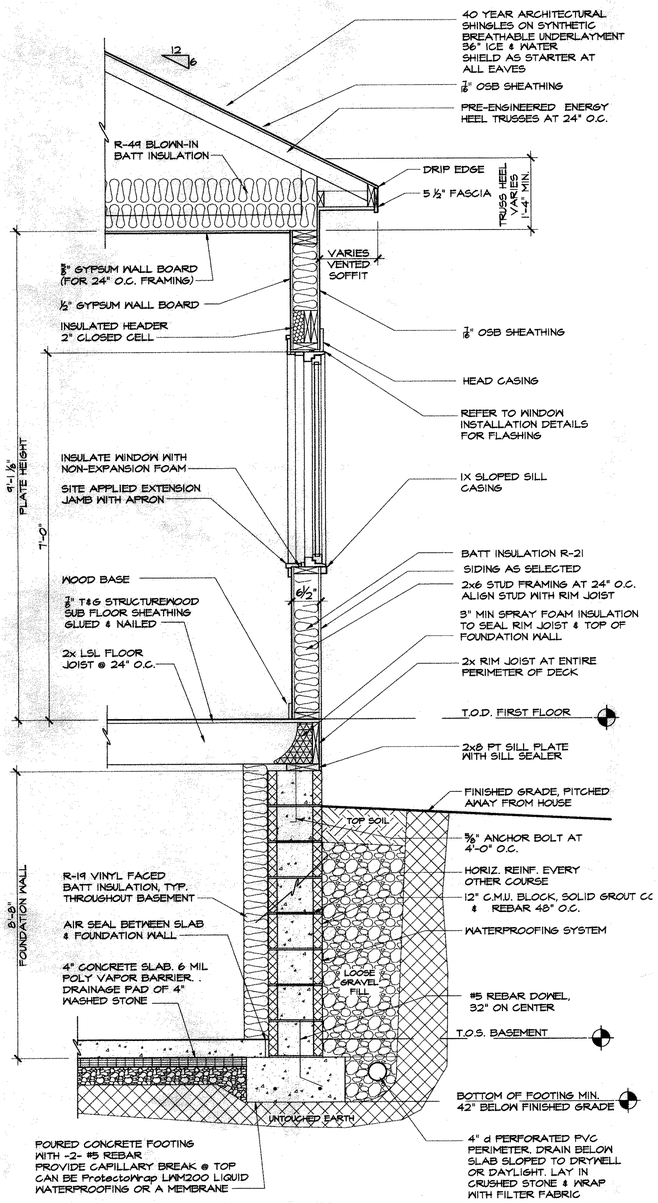

2 / A-1.1 WALL SECTION 3/4" = 1'-0"

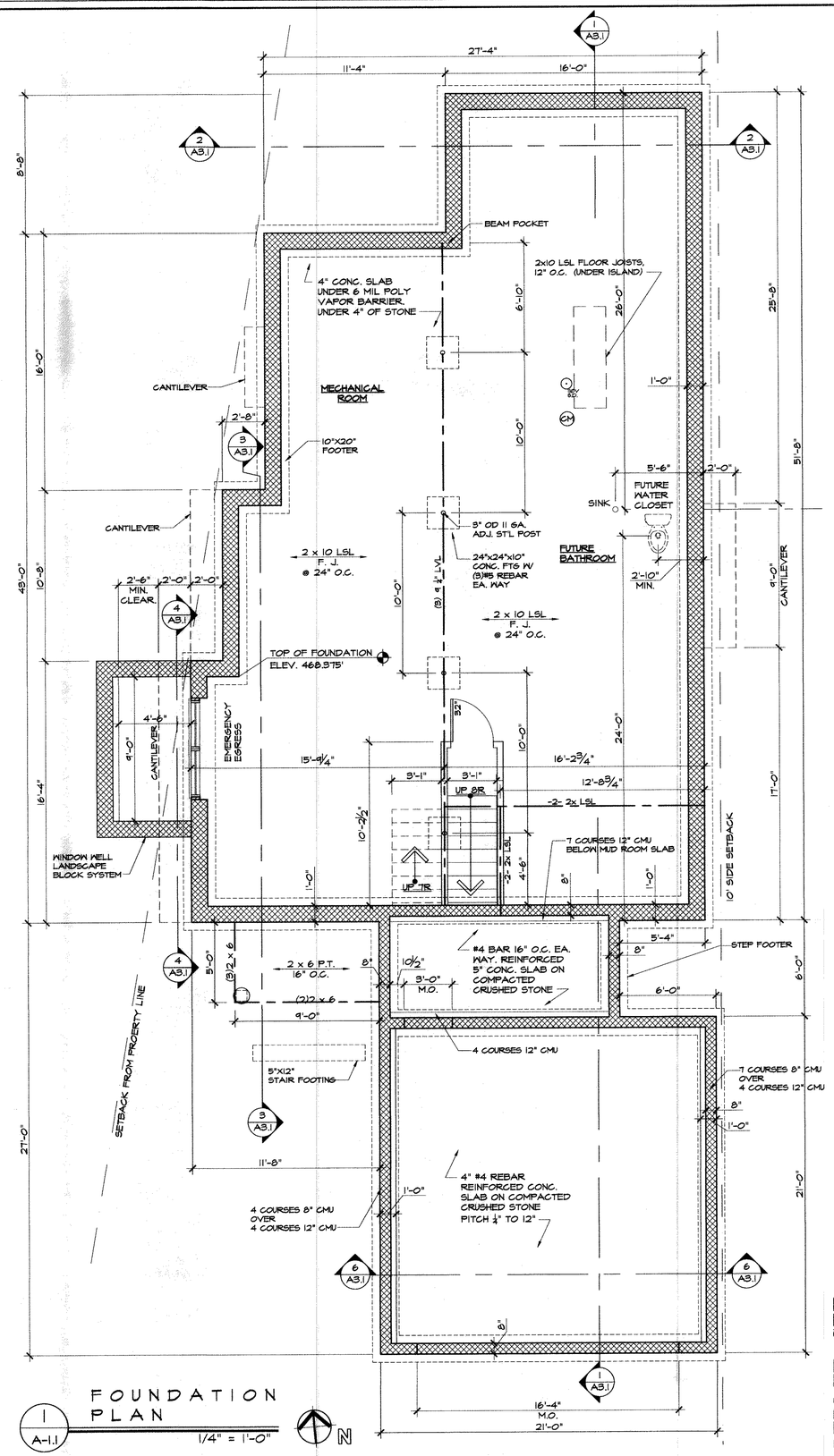

1 / A-1.1 FOUNDATION PLAN 1/4" = 1'-0"

N

PERMIT SET

REVISIONS		
No.	Date	Description

DESIGN WORKS ARCHITECTURE
6 North Main Street, Suite 104 :: Fairport, New York 14450
Phone: 585-377-9001 :: www.newdesignworks.com

Mark and Mary KOSINSKI RESIDENCE

19 High Street
Town of Pittsford
Monroe County, New York

Project No. 2141
Date: 9-13-2022
Scale: AS NOTED
Drawn by: AW
Checked by: CBS

Title: Construction Documents FOUNDATION PLAN

A-1.1

FLOOR PLAN NOTES:

1. ALL EXTERIOR DIMENSIONS ARE FROM OUTSIDE EDGE OF SHEATHING OR CENTERLINE OF STRUCTURAL MEMBER
2. ALL INTERIOR STUD DIMENSIONS ARE FROM CENTER LINE TO CENTER LINE OF STUDS (U.N.O. - UNLESS NOTED OTHERWISE).
3. ALL EXTERIOR FRAMED WALLS TO BE 2x6 @ 16" O.C. (U.N.O.)
4. ALL INTERIOR WALLS TO BE 2x4 @ 16" O.C. (U.N.O.)
5. ALL EXTERIOR HEADERS TO BE (2) 2x6 INSULATED (U.N.O.)
6. DOUBLE JACK STUDS AT ALL 4'-0" OPENINGS AND LARGER.
7. ALL DOORS TO BE LOCATED IN CENTER OF OPENING OR MIN. 4" FROM ADJACENT WALL (U.N.O.)
8. ALL SPOT ELEVATIONS ARE TAKEN FROM 0'-0" DATUM OF MAIN LEVEL SUB-FLOOR (U.N.O.)
9. ■ INDICATES (3) STUD POST, GLUED AND NAILED (U.N.O.)
10. REFER TO EXTERIOR ELEVATION FOR WINDOW SIZES.
11. COORDINATE LOCATION OF UTILITY METERS WITH SITE PLAN AND LOCATE AWAY FROM PUBLIC VIEW. VISUAL IMPACT SHALL BE MINIMIZED, I.E. MOUNT AS LOW AS POSSIBLE.
12. CONTRACTOR TO COORDINATE ALL CLOSET SHELVING AND CABINETRY REQUIREMENTS. CONTRACTOR TO FIELD VERIFY ALL CABINET DIMENSIONS PRIOR TO FABRICATION.
13. PREFABRICATED FIREPLACE CONSTRUCTION SHALL MEET OR EXCEED ALL APPLICABLE CODES REGARDING USE OF FIRE SEPARATION, CLEARANCES, ETC. IT IS THE CONTRACTOR'S RESPONSIBILITY TO ENSURE THAT ALL ITEMS AND CONSTRUCTION MEET OR EXCEED CODE. OVERALL FLUE HEIGHT SHALL BE COORDINATED TO MATCH HEIGHT SHOWN ON PLANS, AND SHALL NOT EXCEED THE TOP OF CHIMNEY CHASE AS CONSTRUCTED.
14. ALL EXPOSED INSULATION SHALL HAVE A FLAME SPREAD RATING LESS THAN 25 AND A SMOKE DENSITY RATING LESS THAN 450.
15. PROVIDE COMBUSTION AIR VENTS, WITH SCREEN AND BACK DAMPER, FOR FIREPLACES, WOOD STOVES AND ANY APPLIANCE WITH AN OPEN FLAME.
16. BATHROOMS AND UTILITY ROOMS SHALL BE VENTED TO THE OUTSIDE WITH A MINIMUM OF A 70 CFM FAN. OR WITH A WHOLE HOUSE VENTILATION HEAT RECOVERY SYSTEM. RANGE HOODS SHALL ALSO BE VENTED TO THE OUTSIDE.
17. RANGE HOODS WITH A CFM OF 400 OR GREATER SHALL BE PROVIDED WITH MAKEUP AIR FROM EXTERIOR TO MAINTAIN NEUTRAL INTERIOR AIR PRESSURE.

ROOF & ATTIC NOTES:

1. APPROVED BITUTHANE WATER SHIELD PRODUCT (ie. GRACE ICE AND WATER SHIELD) TO BE APPLIED TO ALL EAVES AND VALLEYS.

ROOF PITCH	3:12 OR LESS	3:12 - 6:12	6:12 OR GREATER
WATER SHEILD *	ENTIRE ROOF	5'-0"	3'-0"

* DIMENSION FROM EXTERIOR FACE OF WALL UP ROOF SLOPE

1. USE A RUBBER MEMBRANE ROOF ON ALL ROOFS WITH A PITCH OF LESS THAN 3:12.
2. HIGH TEMPERATURE ICE & WATER SHEILD UNDER METAL ROOF (IF APPLICABLE).
3. ENCLOSED ATTIC SPACES MUST HAVE A MIN. NET FREE VENTILATING AREA OF 1/150 OF THE AREA OF VENTED SPACE. WITH THE EXCEPTION OF 1/300 BEING ALLOWED IN CLIMATE ZONES 6, 7 OR 8 WHEN A CLASS I OR II VAPOR RETARDER IS INSTALLED ON THE WARM-IN-WINTER SIDE OF THE CEILING OR NOT LESS THAN 40% AND NOT MORE THAN 50% OF THE REQUIRED VENTILATING AREA IS PROVIDED BY VENTILATORS IN THE UPPER PORTION OF THE ATTIC OR RAFTER SPACE PER THE RESIDENTIAL CODE OF N.Y.S..
4. ROOF CAVITIES THAT EXCEED 30 SF, REQUIRE ACCESS OF 22"x30" WITH HEADROOM ABOVE THE OPENING OF AT LEAST 30" MUST BE LOCATED IN A HALLWAY OR OTHER READILY ACCESSIBLE LOCATION PER THE RESIDENTIAL CODE OF N.Y.S..
5. PROVIDE REQUIRED FLASHING TO MEET OR EXCEED COMMON BUILDING PRACTICE WHERE REQUIRED AND AT ROOF CHANGES, PROJECTIONS, VALLEYS, ETC. INSTALL DIVERTER FLASHING AWAY FROM WHERE THE EAVE OF A SLOPED ROOF INTERSECTS A VERTICAL SIDEWALL.
6. FINAL ON CENTER ROOF RAFTER LAYOUT BY BUILDER.
7. BUILDER TO MAINTAIN PROPER VENTILATION GAP PER DETAILS IN ALL RAFTER BAYS.
8. FINAL GUTTER AND DOWNSPOUT SIZES AND LOCATIONS TBD BY SITE ENGINEER, OWNER, AND/OR CONTRACTOR. DOWNSPOUTS SHALL BE TIED INTO STORM WATER SYSTEM IF AVAILABLE OR EMPTY ONTO SPLASHBLOCKS.

TRUSSES (IF APPLICABLE TO PROJECT)

9. TRUSSES SHOWN AS CONCEPTUAL DESIGN ONLY.
10. TRUSSES TO BE ENGINEERED AND SUPPLIED BY CERTIFIED TRUSS MANUFACTURER.
11. FINAL DESIGN BY TRUSS MANUFACTURER TO BE APPROVED BY OWNER PRIOR TO FABRICATION.
12. PROVIDE HURRICANE TIE FOR EACH TRUSS. USE SIMPSON H2.5 UNLESS NOTED OTHERWISE.

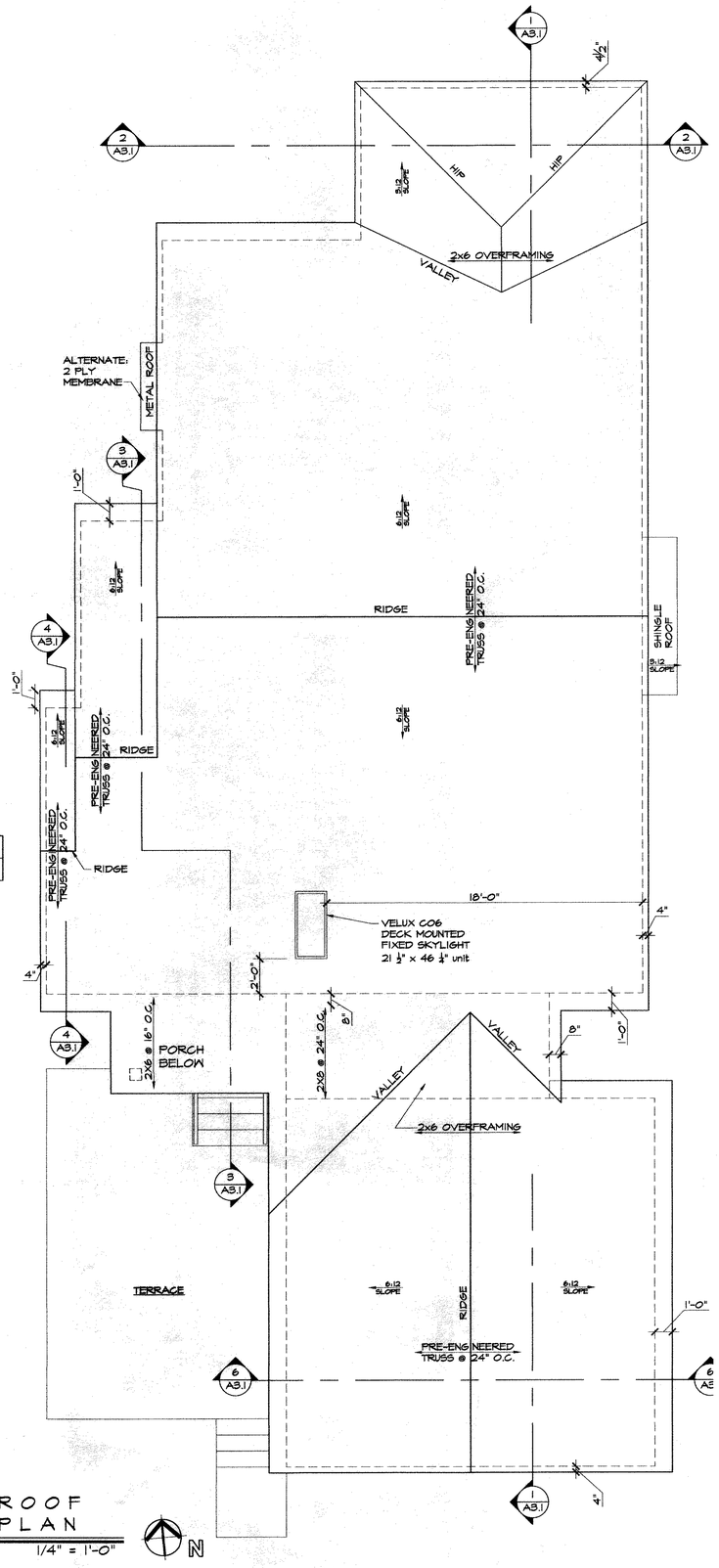

2 A-2.1 ROOF PLAN 1/4" = 1'-0"

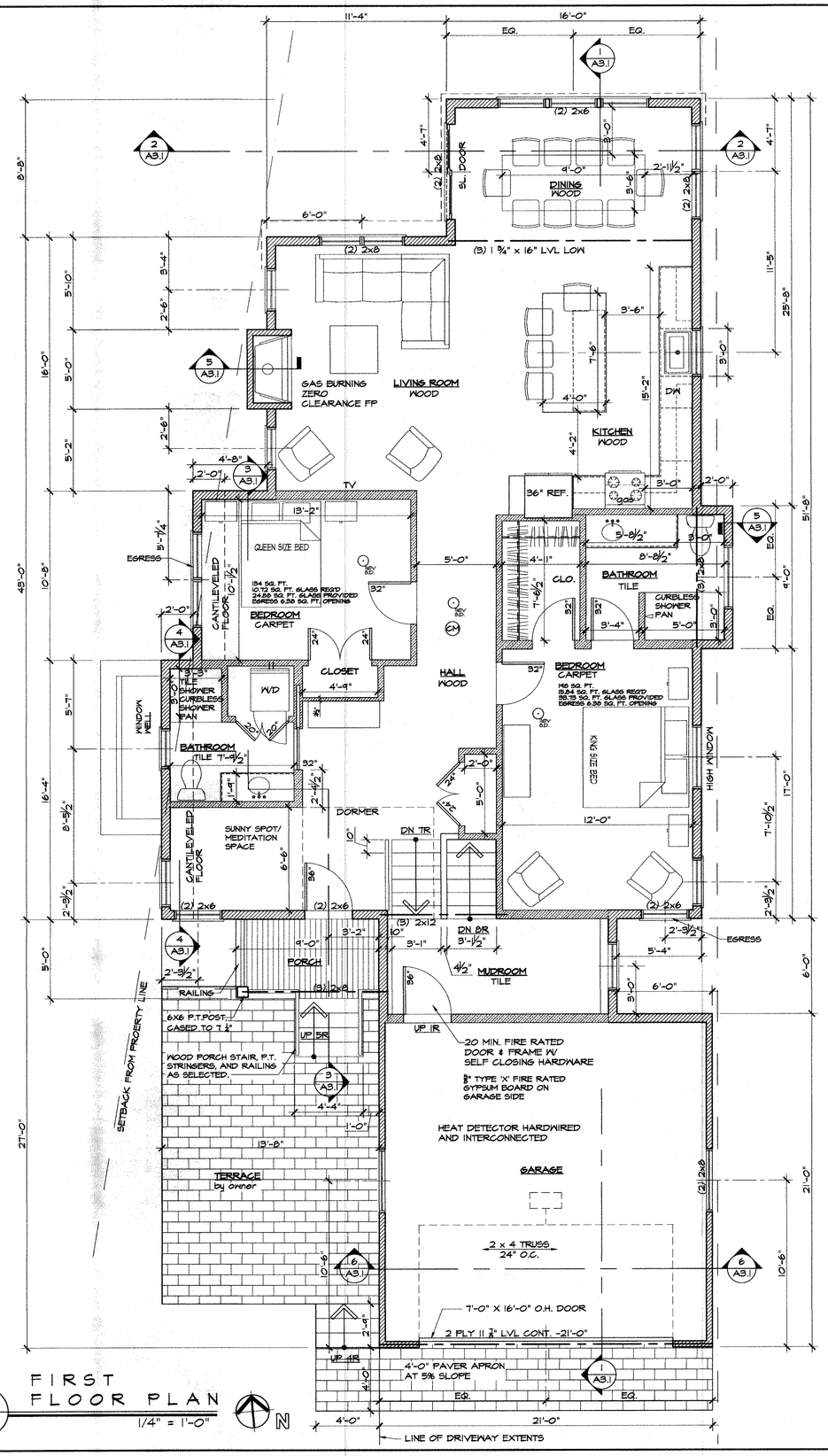

1 A-2.1 FIRST FLOOR PLAN 1/4" = 1'-0"

PERMIT SET

No.	Date	Description

REVISIONS

DESIGN WORKS ARCHITECTURE
6 North Main Street, Suite 104 :: Fairport, New York 14450
Phone: 585-377-9001 :: www.newdesignworks.com

Mark and Mary KOSINSKI RESIDENCE

19 High Street
Town of Pittsford
Monroe County, New York

Project No. 2141
Date: 9-13-2022
Scale: AS NOTED
Drawn by: AW
Checked by: CBS

Title: Construction Documents FLOOR PLAN

A-2.1

CONSTRUCTION AND FRAMING NOTES:

1. JOISTS, HEADERS, AND BEAMS SHALL BE EASTERN HF no. 2 OR BETTER UNLESS NOTED OTHERWISE:
   - HF: Fb=1100 PSI, Fv=75 PSI, E=1,300,000
   - DOUG FIR: Fb=1400 PSI, Fv=95 PSI, E=1,400,000
2. ALL HEADERS SHALL BE FREE FROM ALL SPLITS, CHECKS OR SHAKES.
3. "LVL" BEAMS SHALL HAVE BENDING STRESS FB=2,600 PSI. E= 2.0M PSI.
4. ALL STRUCTURAL STEEL SHALL CONFORM WITH ASTM SPECIFICATION A-36.
5. BEAMS TO FOUNDATION POCKETS SHALL HAVE ½" CLEARANCE FROM MASONRY (½" AIRSPACE THREE (3) SIDES W/ STEEL SHIMS AND SOLID CMU CORES AT BEARING).
6. UNLESS OTHERWISE NOTED PROVIDE A 2x PLATE BOLTED TO TOP FLANGE OF ALL STEEL BEAMS WITH ⅝" DIAMETER BOLTS STAGGERED AT 48" ON CENTER.
7. SPECIAL UPLIFT CONNECTORS AS INDICATED AT CANTILEVERED JOISTS SHALL BE "SIMPSON STRONG TIE" ANCHORS OR EQUAL.
8. ALL WOOD PLATES IN CONTACT WITH CONCRETE SHALL BE PRESSURE TREATED UNLESS SEPARATED BY SILL SEALER MATERIAL.
9. ALL WOOD IN CONTACT WITH THE GROUND, EMBEDDED IN CONCRETE IN DIRECT CONTACT WITH THE GROUND OR EMBEDDED IN CONCRETE EXPOSED TO THE WEATHER THAT SUPPORTS PERMANENT STRUCTURES SHALL BE APPROVED PRESSURE-PRESERVATIVE-TREATED WOOD SUITABLE FOR GROUND CONTACT USE.
10. DOUBLE FLOOR JOISTS AT FLOOR OPENINGS.
11. PROVIDE DOUBLE STUDS (MIN.) UNDER BEAMS W/ SOLID BLKG. TO FNDN. (W/ SOLID CMU CORES AT POINT LOAD), COL. OR BEAM FOR PROPER SUPPORT AND LOAD TRANSFER.
12. FLOOR CONSTRUCTION: ¾" TONGUE AND GROOVE ADVANTECH SUBFLOOR.
13. FLOOR FRAMING LAYOUT SHALL BE COORDINATED WITH GENERAL AND HVAC CONTRACTORS TO PROVIDE ACCESS CHASES AND UNOBSTRUCTED RUNS FOR HVAC DUCT WORK.
14. ALL INTERIOR WALLS SHALL BE COVERED WITH ½" GYPSUM BOARD, WITH METAL CORNER REINFORCING, TAPE FLOAT AND SAND, (3 COATS) USE ⅝" GYPSUM BOARD ON CEILINGS WHEN SUPPORTING MEMBERS ARE 24" O.C. OR GREATER. USE ½" GYPSUM BOARD ON CEILING MEMBERS LESS THAN 24" O.C.
15. ALL WALLS TO RECEIVE TILE SHALL BE CEMENTITIOUS BACKER BOARD IN SHOWERS AND AROUND TUBS.
16. USE (1) LAYER ½" FC TYPE "X" GYPSUM BOARD @ GARAGE WALLS AND CEILINGS. CEILING TO BE ⅝" FIRE CODE TYPE X IF HABITABLE SPACE ABOVE. ALL JOINTS TO BE TAPED, SEALED AND PAINT FINISH.
17. WINDOW AND EXTERIOR DOOR HEADERS AS NOTED ON PLAN.
18. PROVIDE REQUIRED FLASHING TO MEET OR EXCEED ACCEPTABLE COMMON BUILDING PRACTICE WHERE REQ'D AND AT ROOF CHANGES, HORIZ. ABUTMENTS (PORCHES & DECKS), PROJECTIONS, VALLEY'S, OPENINGS... ETC.
19. ALL PRE-ENGINEERED ROOF & FLOOR SYSTEMS TO BE CERTIFIED BY THE MANUFACTURER: INCLUDING FINAL SIZING AND ENGINEERING, BRIDGING AND BLOCKING, THRU-PENETRATIONS, BEARING CONDITIONS AND CONNECTIONS.
20. PROVIDE BRIDGING WHERE JOISTS EXCEEDING A NOMINAL 2 INCHES BY 12 INCHES SHALL BE SUPPORTED LATERALLY BY BLOCKING, DIAGONAL BRIDGING (WOOD OR METAL), OR A CONTINUOUS 1 INCH BY 3 INCH STRIP NAILED ACROSS THE BOTTOM OF JOISTS PERPENDICULAR TO JOISTS AT INTERVALS NOT EXCEEDING 8 FEET.
21. PROVIDE RUST-INHIBITIVE PAINT TO STEEL COLUMNS EXCEPT FOR CORROSION RESISTANT OR TREATED STEEL.
22. ALL AREAS OF HABITABLE SPACE WILL BE PROVIDED WITH OPENINGS FOR EMERGENCY EGRESS OF 5 SF AT FIRST FLOOR AND 5.7 SF AT SECOND FLOOR. ALL SILLS TO BE WITHIN 44" OF FINISH FLOOR FOR EGRESS OPENINGS.
23. FIRE BLOCKING SHALL BE PROVIDED IN CONCEALED WALL AND STAIR SPACES AT THE FLOOR AND CEILING (ALSO 1/2" GYB ON UNDERSIDE OF STAIRS IN ENCLOSED ACCESSIBLE SPACES), FURRED SPACES AT INTERVALS NOT EXCEEDING 10 FT. CONCEALED JOIST SPACES AT BEAMS AND BEARING WALLS.
24. ALL GAS APPLIANCES TO BE DIRECTLY VENTED TO ROOF OR EXTERIOR TERMINATION ADDRESSING ALL REQUIREMENTS PER MANUFACTURERS SPECIFICATIONS.
25. FOR INSULATION VALUES, REFER TO RESCHECK.

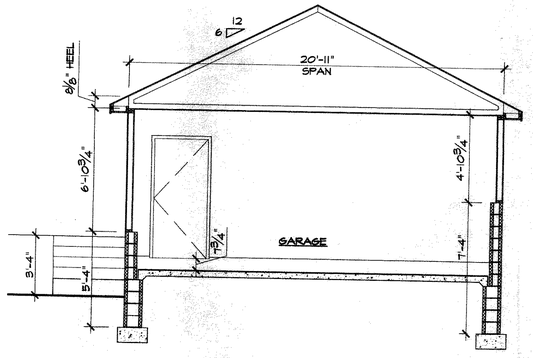

6 A-3.1 BUILDING SECTION 1/4" = 1'-0"

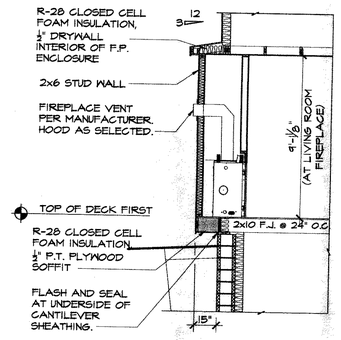

CANTILEVER SECTION: FIREPLACE

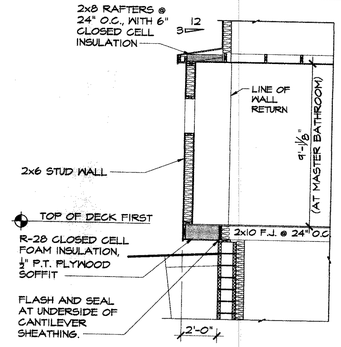

CANTILEVER SECTION: MASTER BATHROOM

5 A-3.1 SECTIONS: CANTILEVERS 1/4" = 1'-0"

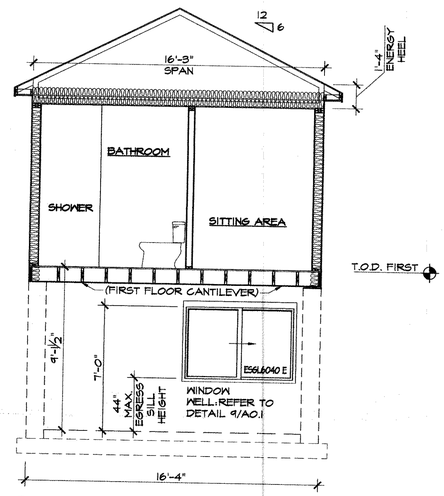

4 A-3.1 BUILDING SECTION 1/4" = 1'-0"

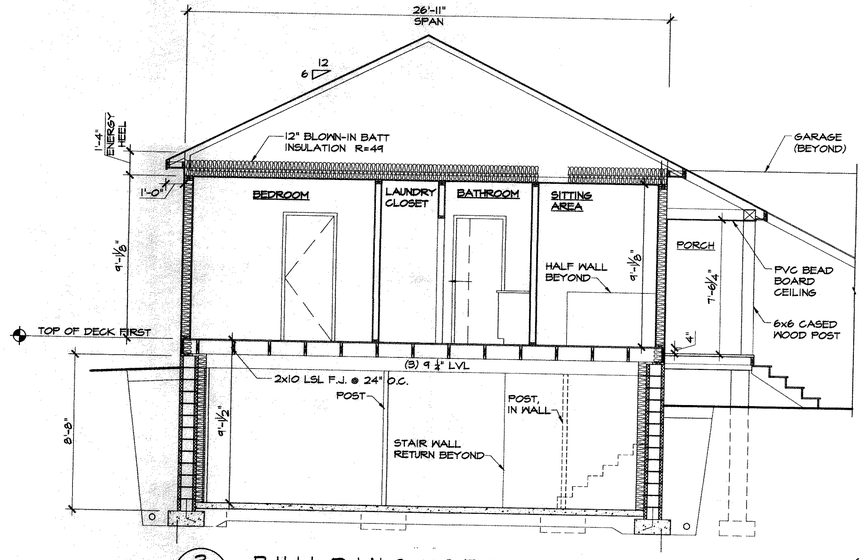

3 A-3.1 BUILDING SECTION 1/4" = 1'-0"

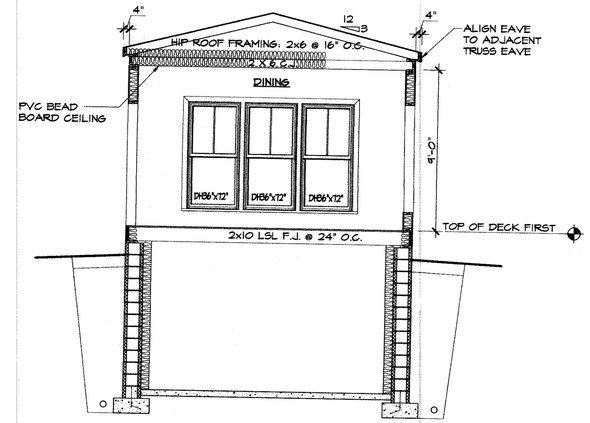

2 A-3.1 BUILDING SECTION 1/4" = 1'-0"

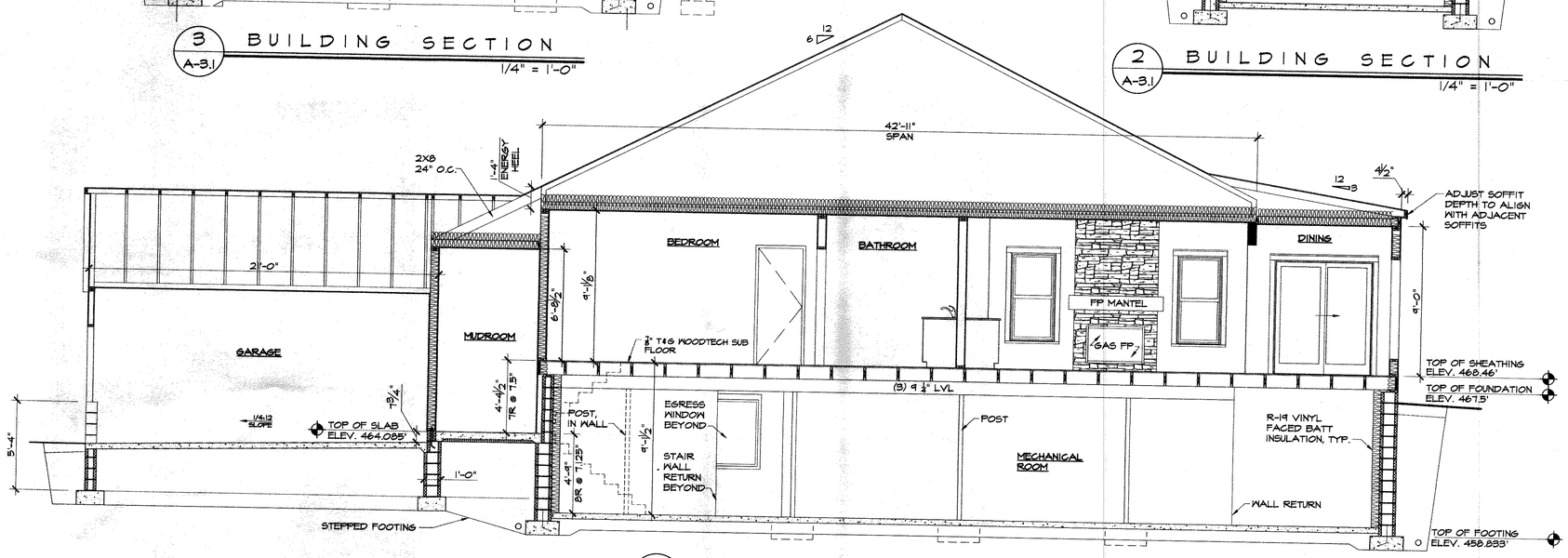

1 A-3.1 BUILDING SECTION 1/4" = 1'-0"

PERMIT SET

REVISIONS		
No.	Date	Description

DESIGN WORKS ARCHITECTURE
6 North Main Street, Suite 104 :: Fairport, New York 14450
Phone: 585-377-9001 :: www.newdesignworks.com

Mark and Mary KOSINSKI RESIDENCE

19 High Street
Town of Pittsford
Monroe County, New York

Project No. 2141
Date: 09-13-2022
Scale: AS NOTED
Drawn by: AW
Checked by: CBS

Title: Construction Documents BUILDING SECTIONS

A-3.1

ELEVATION NOTES:

1. GUTTERS AND DOWNSPOUTS ARE NOT SHOWN FOR CLARITY. DOWNSPOUTS SHALL BE LOCATED TOWARDS THE FRONT AND REAR OF THE HOUSE. LOCATE DOWNSPOUTS IN A NON-VISUALLY OFFENSIVE LOCATIONS.
2. PLUMBING AND HVAC VENTS SHALL BE GROUPED IN ATTIC TO LIMIT ROOF PENETRATIONS AND TO BE LOCATED AWAY FROM PUBLIC VIEW. I.E. AT THE REAR OF THE HOUSE AND SHALL BE PRIMED AND PAINTED TO MATCH ROOF COLOR.
3. WINDOW NUMBERS ON PLANS AND ELEVATIONS REFER TO VND WINDOWS.
4. WINDOW TAGS ON PLANS AND ELEVATIONS THAT HAVE AN "E" OR "T" BESIDE ITS DESIGNATION ARE TO DENOTE "EGRESS" OR "TEMPERED" AS BEING REQUIRED.
5. ALL FINISH COLORS FOR WINDOWS AND FRAMES TO BE SELECTED FROM MANUFACTURER'S FULL RANGE.
6. CONTRACTOR TO VERIFY ALL WINDOW SIZES AND QUANTITIES PRIOR TO ORDERING.
7. INSTALL MEMBRANE UP MIN. 12" ON WALLS AT INTERSECTING ROOFS.
8. MAINTAIN MANUFACTURER'S RECOMMENDED OFFSET OF SIDING TO GRADE OR ROOF SURFACE.

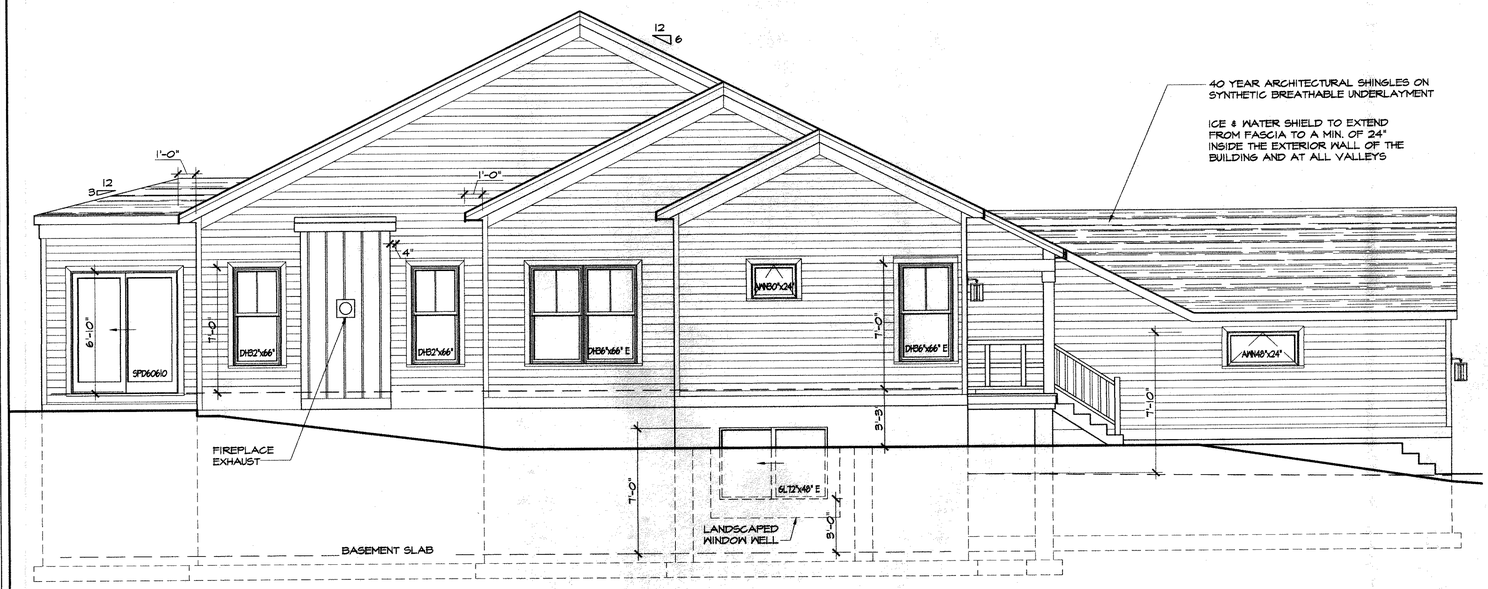

4 A-4.1 WEST ELEVATION
3/16" = 1'-0"

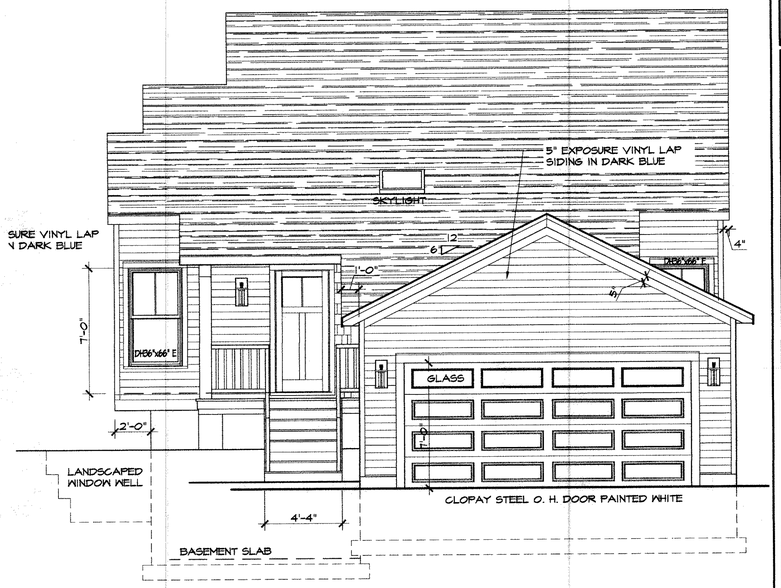

3 A-4.1 SOUTH ELEVATION
3/16" = 1'-0"

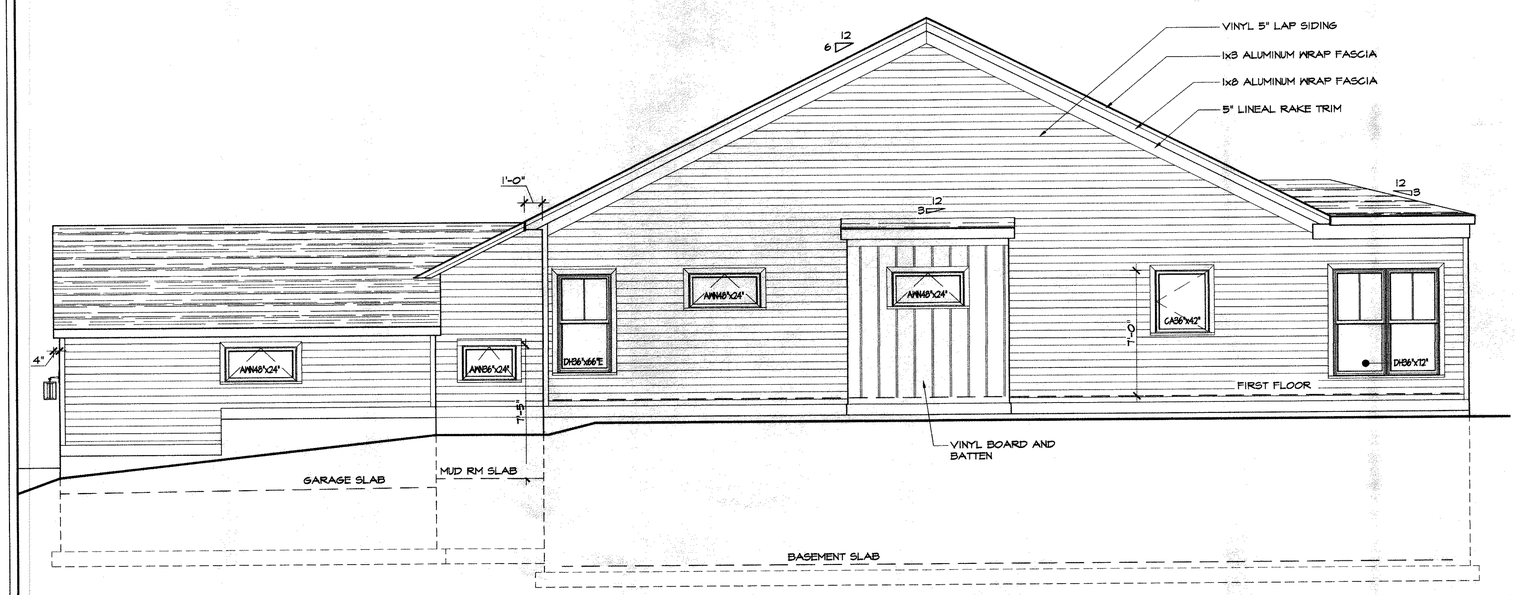

2 A-4.1 EAST ELEVATION
3/16" = 1'-0"

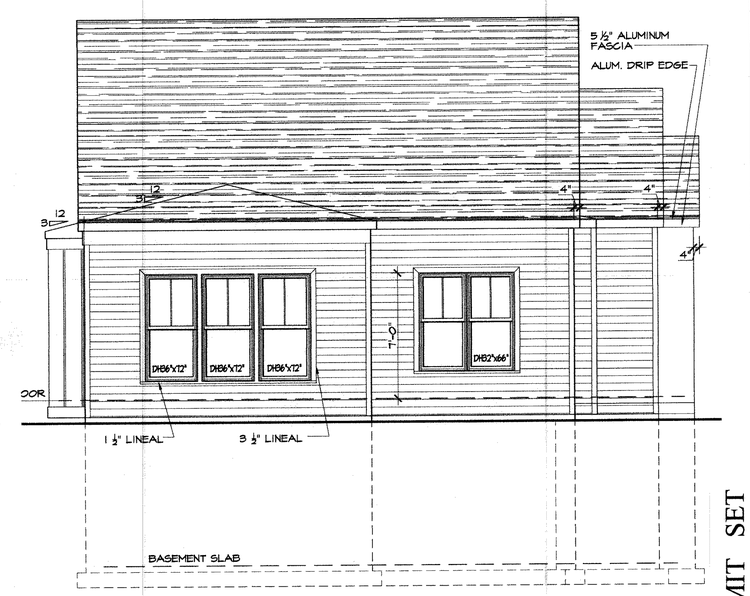

1 A-4.1 NORTH ELEVATION
3/16" = 1'-0"

PERMIT SET

REVISIONS

No.	Date	Description

DESIGN WORKS ARCHITECTURE
6 North Main Street, Suite 104 :: Fairport, New York 14450
Phone: 585-377-9001 :: www.newdesignworks.com

Mark and Mary
KOSINSKI RESIDENCE

19 High Street
Town of Pittsford
Monroe County, New York

Project No. 2141
Date: 09-13-2022
Scale: AS NOTED
Drawn by: AW
Checked by: CBS

Title: Construction Documents
BUILDING ELEVATIONS

A-4.1

Town of Pittsford

Department of Public Works
11 South Main Street
Pittsford, New York 14534

Phone: 585-248-6250
FAX: 585-248-6262

Permit #
B22-000140

DESIGN REVIEW AND HISTORIC PRESERVATION BOARD
REFERRAL OF APPLICATION

Property Address: 47 Skylight Trail ,
Tax ID Number:
Zoning District:
Owner: Morrell Builders
Applicant: Morrell Builders

Application Type:

- [x] Residential Design Review §185-205 (B)
- [ ] Commercial Design Review §185-205 (B)
- [ ] Signage §185-205 (C)
- [ ] Certificate of Appropriateness §185-197
- [ ] Landmark Designation §185-195 (2)
- [ ] Informal Review
- [ ] Build to Line Adjustment §185-17 (B) (2)
- [ ] Building Height Above 30 Feet §185-17 (M)
- [ ] Corner Lot Orientation §185-17 (K) (3)
- [ ] Flag Lot Building Line Location §185-17 (L) (1) (c)
- [ ] Undeveloped Flag Lot Requirements §185-17 (L) (2)

Project Description: Applicant is requesting design review for the proposed construction of a new town home dwelling. The proposed building will consist of 2 attached single family dwellings sharing a common wall. Lot 26 (47 Skylight Trail) will be approximately 2023 sq. ft. and Lot 25 (45 Skylight Trail) will be 2010 sq. ft. The town homes will be located in the new Alpine Ridge development.

Meeting Date: October 13, 2022

RN Residential Neighborhood Zoning

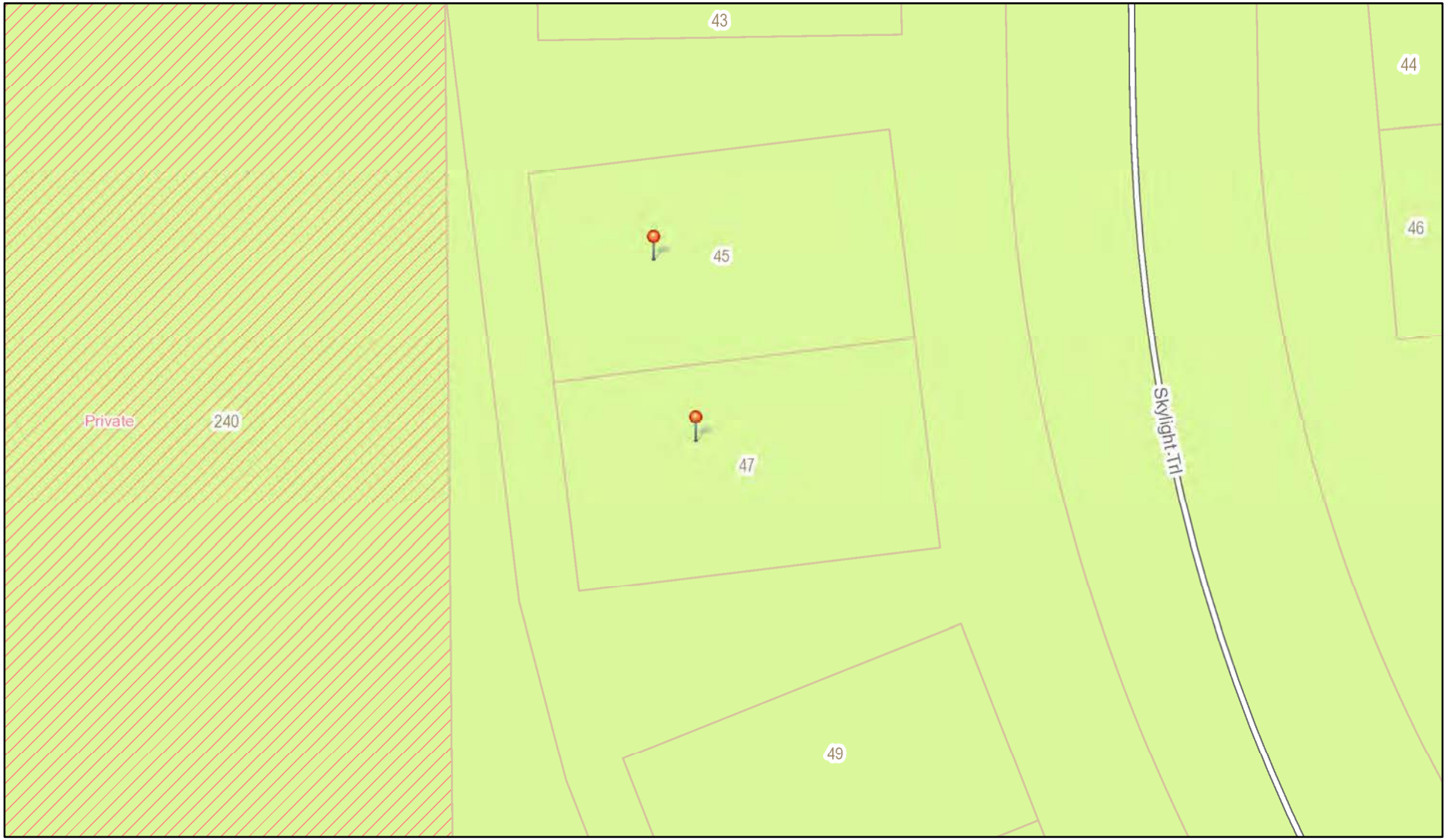

Printed September 15, 2022

1:564

0 20 40 80 ft

0 5 10 20 m

Town of Pittsford GIS


N
Skylight
04/05/2021
© All EagleView Technology Corporation

"CERTIFICATIONS INDICATED HEREON SHALL RUN ONLY TO THE PERSON FOR WHOM THE SURVEY IS PREPARED, AND ON HIS BEHALF TO THE TITLE COMPANY, GOVERNMENTAL AGENCY AND LENDING INSTITUTION LISTED HEREON, AND TO THE ASSIGNEES OF THE LENDING INSTITUTION. CERTIFICATIONS ARE NOT TRANSFERABLE TO ADDITIONAL INSTITUTIONS OR SUBSEQUENT OWNERS."

THIS MAP AND THE INFORMATION SHOWN HEREON IS NOT TO BE USED WITH AN "AFFIDAVIT OF NO CHANGE." BME ASSOCIATES ASSUMES NO LIABILITY TO THE PARTIES NOTED HEREON OR TO ANY FUTURE OWNER, TITLE COMPANY, GOVERNMENTAL AGENCY, ATTORNEY OR LENDING INSTITUTION IN THE EVENT THAT THIS MAP IS USED WITH AN "AFFIDAVIT OF NO CHANGE," OR SIMILAR INSTRUMENT.

COPIES OF THIS SURVEY MAP NOT BEARING THE LAND SURVEYOR'S ORIGINAL INKED SEAL OR EMBOSSED SEAL SHALL NOT BE CONSIDERED TO BE A VALID TRUE COPY.

"UNAUTHORIZED ALTERATION OR ADDITION TO THIS SURVEY MAP IS A VIOLATION OF SECTION 7209, OF THE NEW YORK STATE EDUCATION LAW."

GRAPHIC SCALE

30 0 15 30 60

(IN FEET)
1 inch = 30 ft.

LEGEND

- BOUNDARY LINE
- CENTERLINE
- ADJOINER/R.O.W. LINE
- SETBACK LINE
- PROPERTY MARKER FOUND
- EXISTING EASEMENT LINE

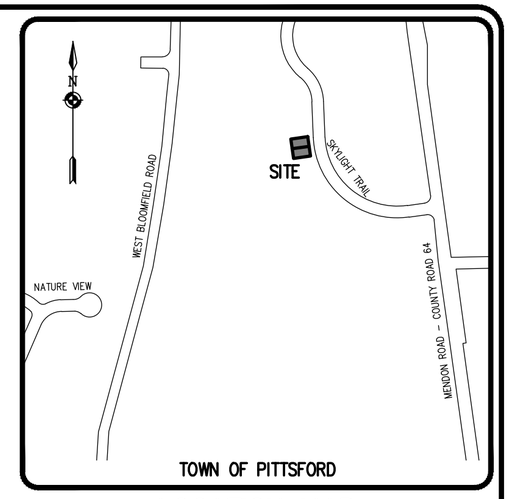

LOCATION MAP

NOT TO SCALE

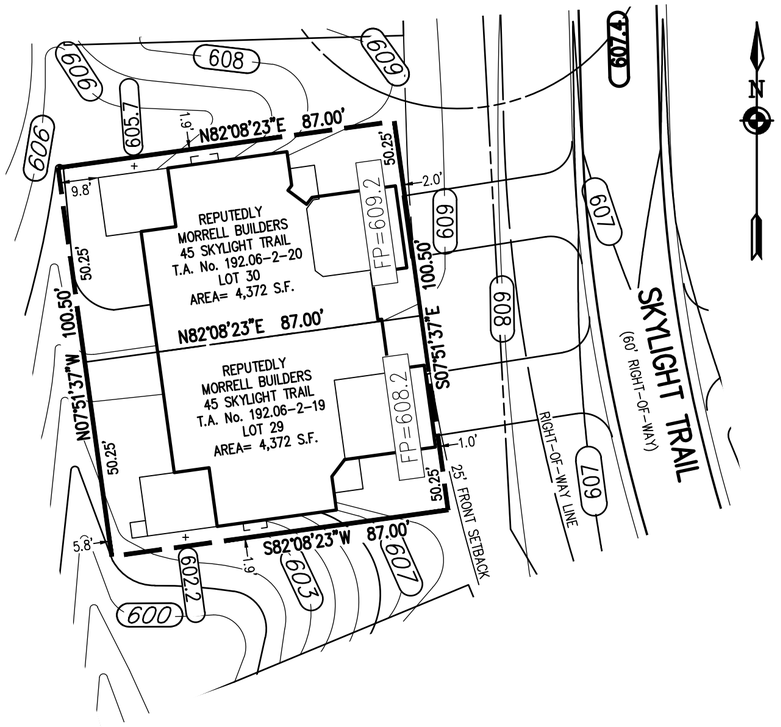

REFERENCES:

1. A PLAN ENTITLED "ALPINE RIDGE SUBDIVISION, SECTION 2", AS FILED IN THE MONROE COUNTY CLERK'S OFFICE AT LIBER 364 OF MAPS, PAGE 2.
2. A PLAN ENTITLED "FINAL SECTION 2 PLANS FOR ALPINE RIDGE SUBDIVISION, GRADING PLAN," PREPARED BY MARATHON ENGINEERING, HAVING JOB NUMBER 0891–17, DRAWING NUMBER C4.0 AND LAST REVISED SEPTEMBER 17, 2021
3. AN ABSTRACT OF TITLE WAS NOT PROVIDED FOR THE COMPLETION OF THIS SURVEY.

NOTES:

1. THE BEARING BASE SHOWN HEREON WAS TAKEN FROM REFERENCE 1.
2. SETBACK REQUIREMENTS:
   FRONT 0' (LOT) 25' (R.O.W.)
   SIDE 0'
   REAR 0'
3. GRADING SHOW HEREON WAS TAKEN FROM REFERENCE 2.

PHELPS & GORHAM PURCHASE, TOWNSHIP 12, RANGE 5, TOWN LOT 6, TAX ACCOUNT No.'S 192.06–2–20 & 192.06–2–19

P:\2688\Instrument Surveys\2688 Lot 29–30 Plot Plan.dwg

PROJECT MANAGER	GD BELL
PROJECT SURVEYOR	GD BELL
DRAWN BY	JT GILMORE
SCALE	1"=30'
DATE ISSUED	SEPTEMBER 13, 2022
PROJECT NO.	2688
DRAWING NO.	36

PROJECT: ALPINE RIDGE SUBDIVISION
SECTION 2

LOCATION: TOWN OF PITTSFORD, MONROE COUNTY, NEW YORK STATE

CLIENT: MORRELL BUILDERS
1501 PITTSFORD–VICTOR ROAD
VICTOR, NEW YORK, 14564

DRAWING TITLE: PLOT PLAN OF LOTS 29 & 30

STATE OF NEW YORK
GREGORY D. LAPPL
050661
LICENSED LAND SURVEYOR

BME ASSOCIATES
ENGINEERS • SURVEYORS • LANDSCAPE ARCHITECTS
10 LIFTBRIDGE LANE EAST
FAIRPORT, NEW YORK 14450
WWW.BMEPC.COM
PHONE 585-377-7360
FAX 585-377-7309

	REVISIONS	DATE	BY
7			
6			
5			
4			
3			
2			
1			

Drawing Alteration
The following is an excerpt from the New York State Education Law Article 145 Section 7209 and applies to this drawing:
"It is a violation of this law for any person, unless he is acting under the direction of a licensed professional engineer or land surveyor to alter any item in any way. If an item bearing the seal of an engineer or land surveyor is altered, the altering engineer or land surveyor shall affix to the item his seal and the notation "altered by" followed by his signature and the date of such alteration, and a specific description of the alteration."

FRONT ELEVATION - LOT 29 2023 S.F.

1/4"= 1'-0"

NOTE: - WINDOWS TO BE "VWD 210 SERIES" DOUBLE-HUNG, LOW-E
- DOORS TO BE "THERMA-TRU" OR EQ.
- DOWN SPOUTS TO BE LOCATED BY CONTRACTOR IN FIELD
(E) WINDOW MEETS OR EXCEEDS THE EGRESS REQUIREMENTS PER SECTION R310 OF THE RES. CODE OF NYS

ALL FOOTINGS MUST BEAR ON FIRM, UNDISTURBED NATIVE SOILS OR ENGINEERED FILL 42" MIN. BELOW ADJACENT GRADE. ON SITE SOIL USED AS ENGINEERED FILL SHALL BE FREE OF DELETERIOUS MATERIALS WITH NO PARTICLES GREATER THAN 3". FILL SHALL BE PLACED IN LOOSE LIFTS NOT TO EXCEED 8" IN DEPTH AND COMPACTED TO 95% MAXIMUM DRY DENSITY PER ASTM D1557 AT MOISTURE CONTENTS WITHIN 3% OF OPTIMUM

FRONT ELEVATION - LOT 30 2010 S.F.

1/4"= 1'-0"

NOTE: - WINDOWS TO BE "VWD 210 SERIES" DOUBLE-HUNG, LOW-E
- DOORS TO BE "THERMA-TRU" OR EQ.
- DOWN SPOUTS TO BE LOCATED BY CONTRACTOR IN FIELD
(E) WINDOW MEETS OR EXCEEDS THE EGRESS REQUIREMENTS PER SECTION R310 OF THE RES. CODE OF NYS

ALL FOOTINGS MUST BEAR ON FIRM, UNDISTURBED NATIVE SOILS OR ENGINEERED FILL 42" MIN. BELOW ADJACENT GRADE. ON SITE SOIL USED AS ENGINEERED FILL SHALL BE FREE OF DELETERIOUS MATERIALS WITH NO PARTICLES GREATER THAN 3". FILL SHALL BE PLACED IN LOOSE LIFTS NOT TO EXCEED 8" IN DEPTH AND COMPACTED TO 95% MAXIMUM DRY DENSITY PER ASTM D1557 AT MOISTURE CONTENTS WITHIN 3% OF OPTIMUM

LEFT SIDE ELEVATION - LOT 29

1/4"= 1'-0"

HANDRAIL NOTES:
-HANDRAILS TO BE 34"-38" ABV. THE SLOPED PLANE TO BE CONTINUOUS FULL LENGTH OF STAIR.
-HANDRAILS TO CONFORM TO 2020 IRC SECTION R311.7.8 AND SECTION R312.1.1

REVISIONS:

NO.	DATE	DESCRIPTION

DRAWING TITLE: Front Elevation Units 29 & 30

PHASE: Construction Documents

PROJECT: Alpine Ridge - Units 29 & 30 Pittsford, N.Y.

DATE: September 14, 2022

CLIENT: Morrell Builders

JOB NO.: A22-043

CKH architecture
1501 Pittsford Victor Road
Suite 100
Victor, New York 14564
phone:(585) 249-1334
e-mail: CKHenessey@frontiernet.net

DRAWING NO.: A-1

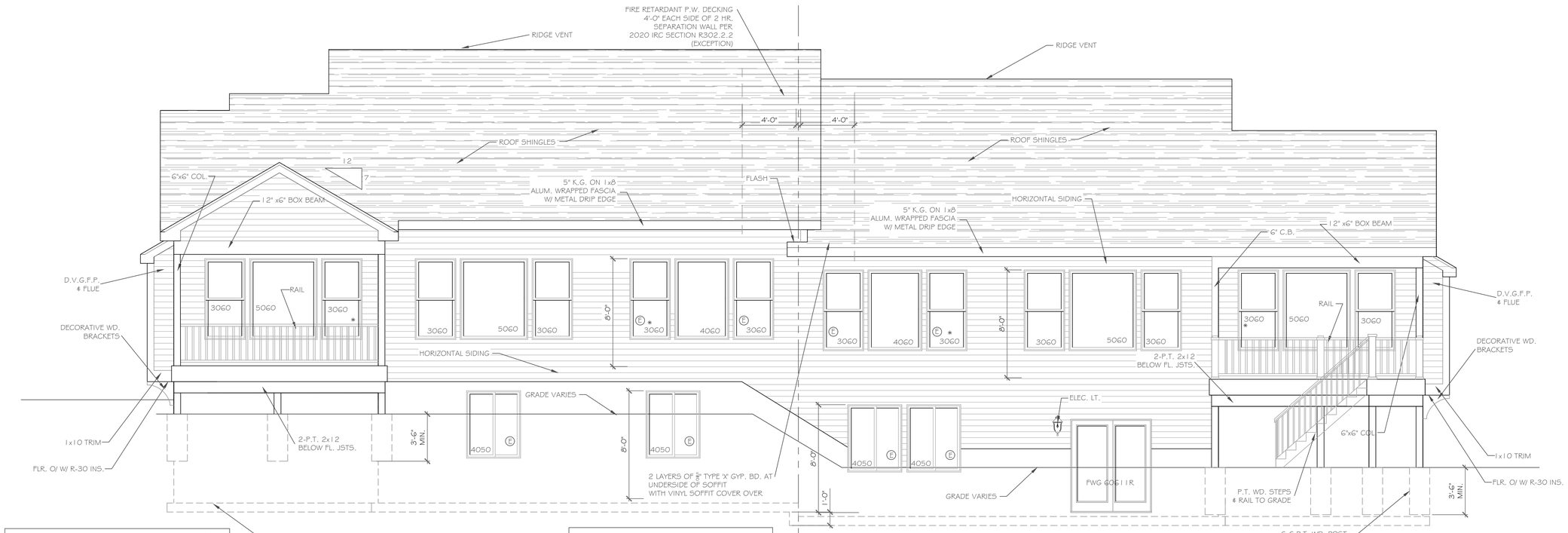

HANDRAIL NOTES:
-HANDRAILS TO BE 34"-38" ABV. THE SLOPED PLANE TO BE CONTINUOUS FULL LENGTH OF STAIR.
-HANDRAILS TO CONFORM TO 2020 IRC SECTION R311.7.8 AND SECTION R312.1.1

ALL FOOTINGS MUST BEAR ON FIRM, UNDISTURBED NATIVE SOILS OR ENGINEERED FILL 42" MIN. BELOW ADJACENT GRADE. ON SITE SOIL USED AS ENGINEERED FILL SHALL BE FREE OF DELETERIOUS MATERIALS WITH NO PARTICLES GREATER THAN 3". FILL SHALL BE PLACED IN LOOSE LIFTS NOT TO EXCEED 8" IN DEPTH AND COMPACTED TO 95% MAXIMUM DRY DENSITY PER ASTM D1557 AT MOISTURE CONTENTS WITHIN 3% OF OPTIMUM

REAR ELEVATION - LOT 29

1/4"= 1'-0"

REAR ELEVATION - LOT 30

1/4"= 1'-0"

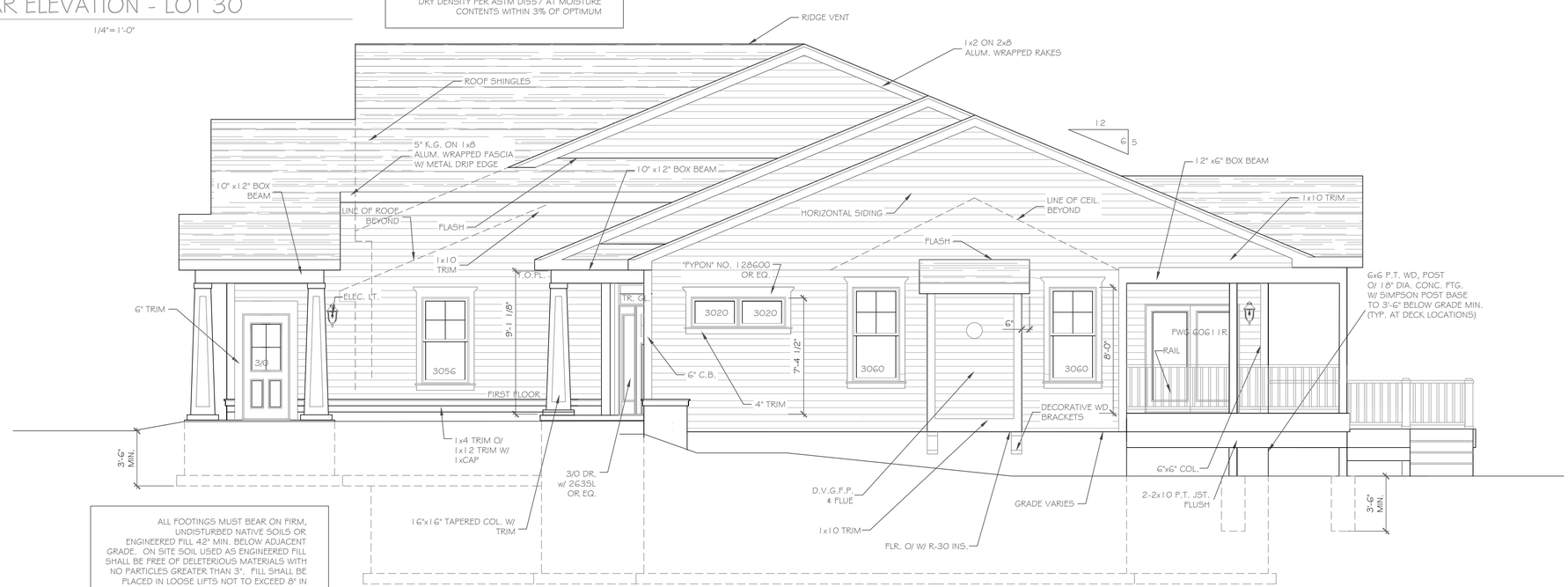

ALL FOOTINGS MUST BEAR ON FIRM, UNDISTURBED NATIVE SOILS OR ENGINEERED FILL 42" MIN. BELOW ADJACENT GRADE. ON SITE SOIL USED AS ENGINEERED FILL SHALL BE FREE OF DELETERIOUS MATERIALS WITH NO PARTICLES GREATER THAN 3". FILL SHALL BE PLACED IN LOOSE LIFTS NOT TO EXCEED 8" IN DEPTH AND COMPACTED TO 95% MAXIMUM DRY DENSITY PER ASTM D1557 AT MOISTURE CONTENTS WITHIN 3% OF OPTIMUM

RIGHT SIDE ELEVATION - LOT 30

1/4"= 1'-0"

HANDRAIL NOTES:
-HANDRAILS TO BE 34"-38" ABV. THE SLOPED PLANE TO BE CONTINUOUS FULL LENGTH OF STAIR.
-HANDRAILS TO CONFORM TO 2020 IRC SECTION R311.7.8 AND SECTION R312.1.1

REVISIONS:

NO.	DATE	DESCRIPTION

PROJECT:
Alpine Ridge - Lots 29 & 30
Pittsford, N.Y.

CLIENT:
Morrell Builders

DRAWING TITLE:
Rear Elevation
Lots 29 & 30

PHASE:
Construction Documents

JOB NO.:
A22-043

DATE:
September 14, 2022

CKH architecture
1 501 Pittsford Victor Road
Suite 100
Victor, New York 14564
phone:(585) 249-1334
e-mail: CKHarchitecture@frontiernet.net

DRAWING NO.:
A-2

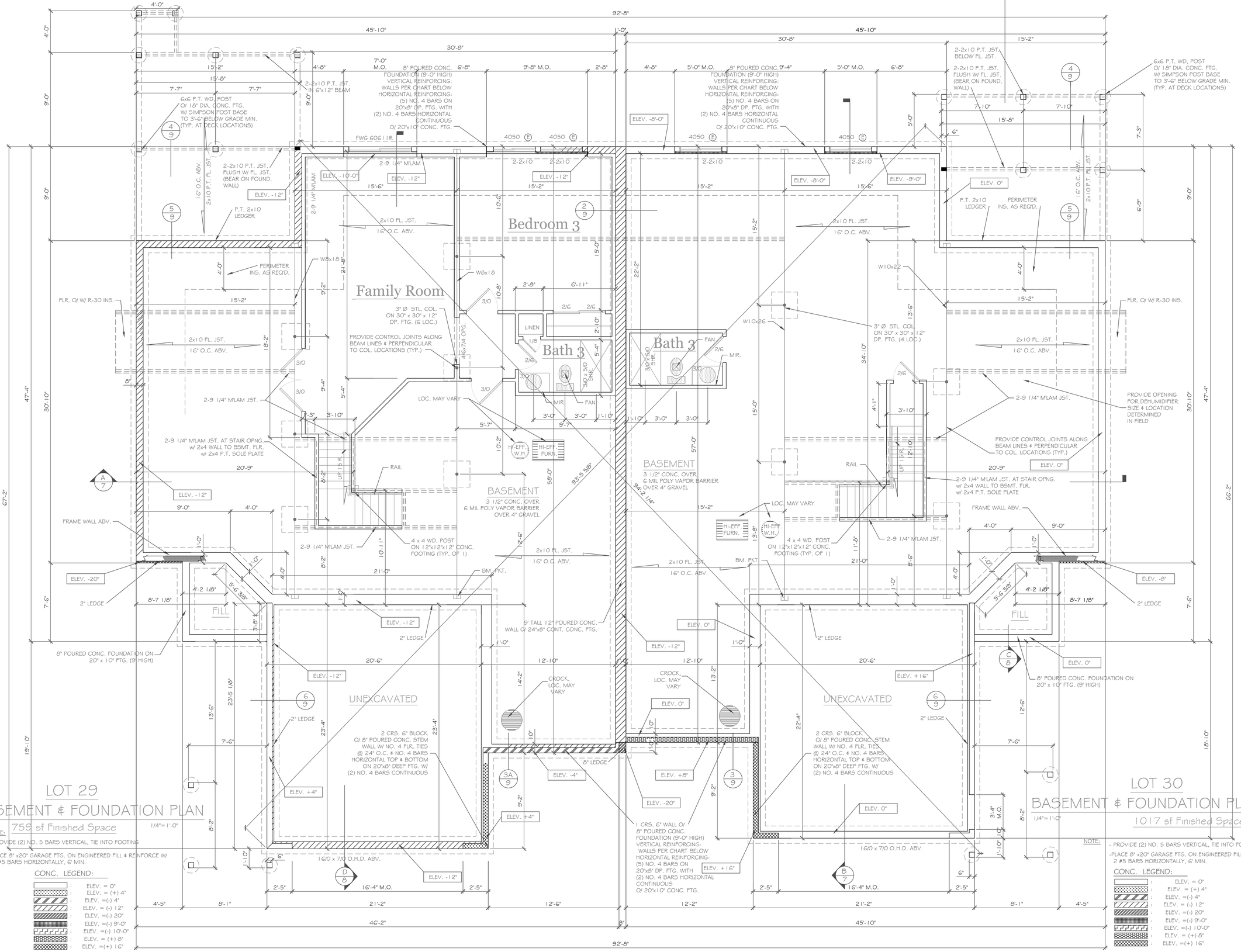

REVISIONS:

NO.	DATE	DESCRIPTION

PROJECT:
Alpine Ridge - Units 29 & 30
Pittsford, New York

CLIENT:
Morrell Builders

DRAWING TITLE:
Basement & Foundation Plan

PHASE:
Construction Documents

JOB NO.:
A22-043

DATE:
August 2022

CKH architecture
1501 Pittsford Victor Rd.
Suite 100
Victor, New York 14564
phone:(585) 249-1234
e-mail: CKHenessey@frontiernet.net

DRAWING NO.:
A-3

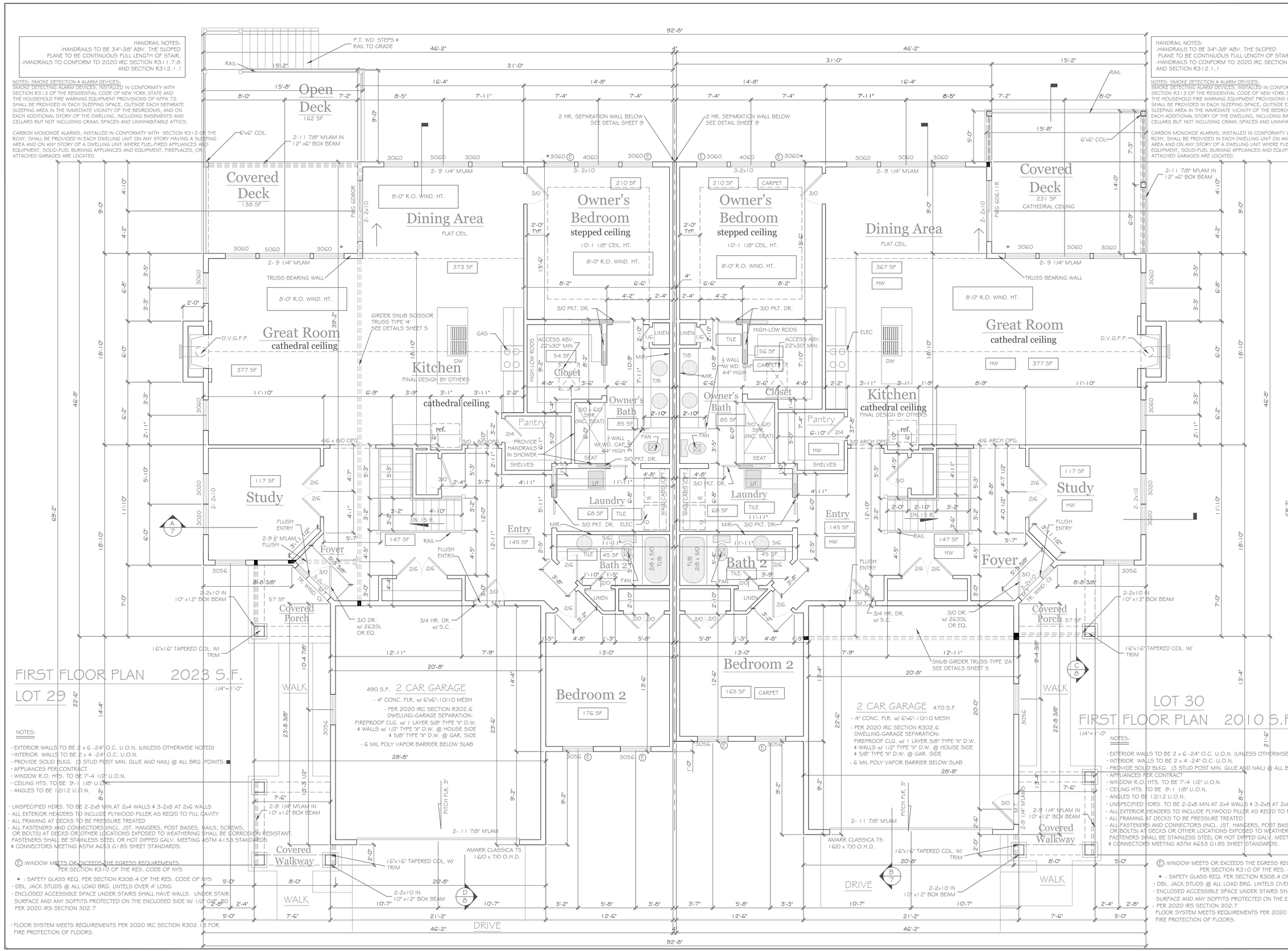

REVISIONS:

NO.	DATE	DESCRIPTION

DRAWING TITLE: First Floor Plans Units 29 & 30

PHASE: Construction Documents

PROJECT: Alpine Ridge - Units 29 & 30
Pittsford, N.Y.

CLIENT: Morrell Builders

DATE: August 2022

JOB NO.: A22-043

CKH architecture
1501 Pittsford Victor Road
Suite 100
Victor, New York 14564
phone:(585) 249-1334
e-mail: CKHenneseys@frontiernet.net

DRAWING NO.: A-4